molex

MX123 SEALED RCPT ASSY (56 CKT)
BOM & PIN OUT SHEET

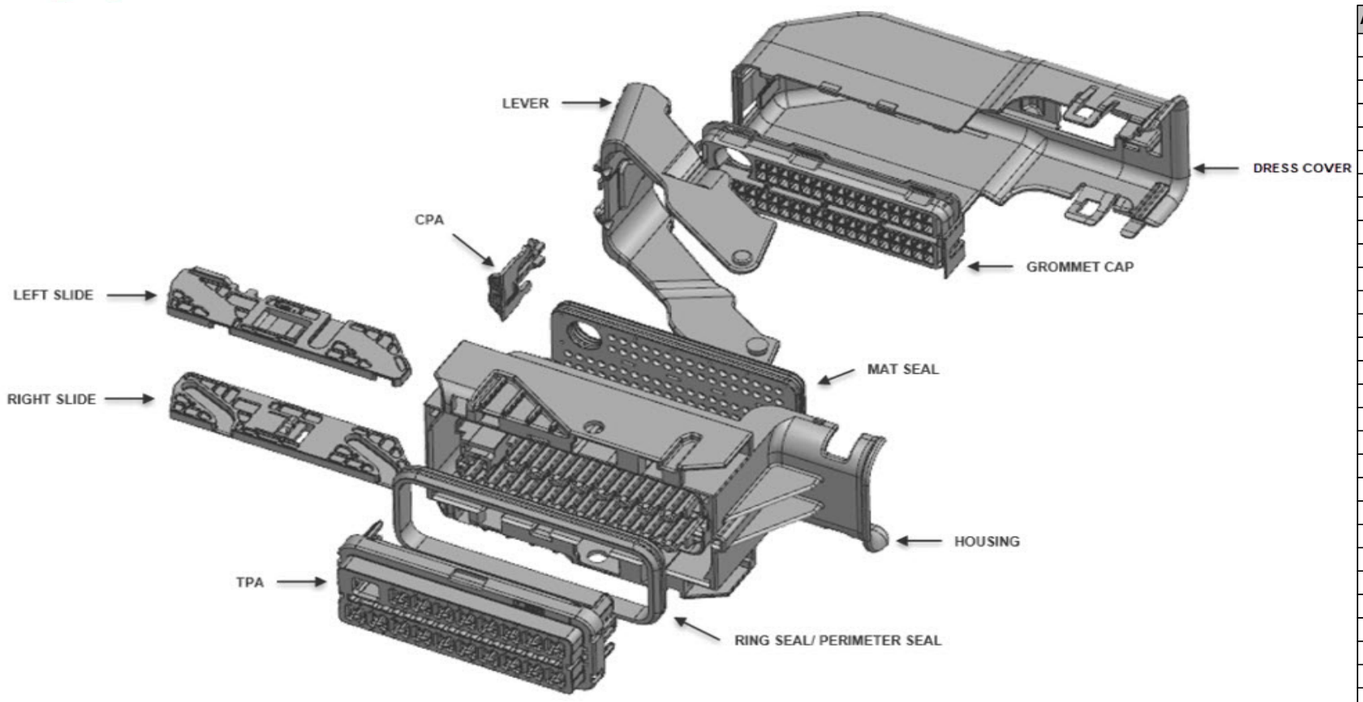

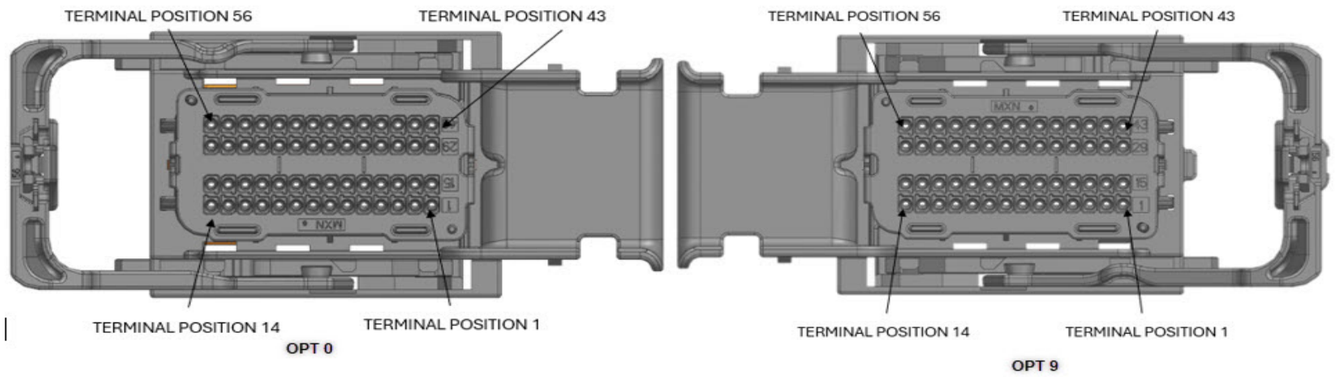

ABBREVIATION	DESCRIPTION	COLOR	MATERIAL
G-CAP-0-P	GROMMET CAP OPTION 0 PLUGGED	BLACK	SPS/PA, G.F 30%
G-CAP-0-O	GROMMET CAP OPTION 0 All OPEN	BLACK	SPS/PA, G.F 30%
G-CAP-9-P	GROMMET CAP OPTION 9 PLUGGED	BLACK	SPS/PA, G.F 30%
G-CAP-9-O	GROMMET CAP OPTION 9 All OPEN	BLACK	SPS/PA, G.F 30%
C-HSG-G0	CONNECTOR HOUSING KEY G - WDC OPT 0	BLACK	SPS/PA, G.F 30%
C-HSG-H0	CONNECTOR HOUSING KEY H- WDC OPT 0	BLACK	SPS/PA, G.F 30%
C-HSG-J0	CONNECTOR HOUSING KEY J- WDC OPT 0	BLACK	SPS/PA, G.F 30%
C-HSG-K0	CONNECTOR HOUSING KEY K - WDC OPT 0	BLACK	SPS/PA, G.F 30%
C-HSG-L0	CONNECTOR HOUSING KEY L - WDC OPT 0	BLACK	SPS/PA, G.F 30%
C-HSG-M0	CONNECTOR HOUSING KEY M- WDC OPT 0	BLACK	SPS/PA, G.F 30%
C-HSG-G9	CONNECTOR HOUSING KEY G- WDC OPT 9	BLACK	SPS/PA, G.F 30%
C-HSG-H9	CONNECTOR HOUSING KEY H- WDC OPT 9	BLACK	SPS/PA, G.F 30%
C-HSG-J9	CONNECTOR HOUSING KEY J- WDC OPT 9	BLACK	SPS/PA, G.F 30%
C-HSG-K9	CONNECTOR HOUSING KEY K- WDC OPT 9	BLACK	SPS/PA, G.F 30%
C-HSG-L9	CONNECTOR HOUSING KEY L- WDC OPT 9	BLACK	SPS/PA, G.F 30%
C-HSG-M9	CONNECTOR HOUSING KEY M- WDC OPT 9	BLACK	SPS/PA, G.F 30%
TPA-G0	TERMINAL POSITION ASSURANCE (TPA) OPTION 0	BLUE	SPS/PA, G.F 30%
TPA-H0	TERMINAL POSITION ASSURANCE (TPA) OPTION 0	STONE GRAY	SPS/PA, G.F 30%
TPA-J0	TERMINAL POSITION ASSURANCE (TPA) OPTION 0	BLACK	SPS/PA, G.F 30%
TPA-K0	TERMINAL POSITION ASSURANCE (TPA) OPTION 0	BROWN	SPS/PA, G.F 30%
TPA-L0	TERMINAL POSITION ASSURANCE (TPA) OPTION 0	GREEN	SPS/PA, G.F 30%
TPA-M0	TERMINAL POSITION ASSURANCE (TPA) OPTION 0	NATURAL	SPS/PA, G.F 30%
TPA-M0-1	TERMINAL POSITION ASSURANCE (TPA) OPTION 0 (CD SERVICE HOLE)	NATURAL	SPS/PA, G.F 30%
TPA-M0-2	TERMINAL POSITION ASSURANCE (TPA) OPTION 0 (LINCOLN SERVICE HOLE)	NATURAL	SPS/PA, G.F 30%
TPA-J0 -1	TERMINAL POSITION ASSURANCE (TPA) OPTION 0	BLACK	SPS/PA, G.F 30%
TPA-J0 -2	TERMINAL POSITION ASSURANCE (TPA) OPTION 1	BLACK	SPS/PA, G.F 30%
TPA-G9	TERMINAL POSITION ASSURANCE (TPA) OPTION 9	BLUE	SPS/PA, G.F 30%
TPA-H9	TERMINAL POSITION ASSURANCE (TPA) OPTION 9	STONE GRAY	SPS/PA, G.F 30%
TPA-J9	TERMINAL POSITION ASSURANCE (TPA) OPTION 9	BLACK	SPS/PA, G.F 30%
TPA-K9	TERMINAL POSITION ASSURANCE (TPA) OPTION 9	BROWN	SPS/PA, G.F 30%
TPA-L9	TERMINAL POSITION ASSURANCE (TPA) OPTION 9	GREEN	SPS/PA, G.F 30%
TPA-M9	TERMINAL POSITION ASSURANCE (TPA) OPTION 9	NATURAL	SPS/PA, G.F 30%
MAL	MATE ASSIST LEVER	BLACK	SPS/NYLON GF30
MAL-2	MATE ASSIST LEVER-2	BLACK	SPS/NYLON GF30
RS	SLIDE - RIGHT	BLACK	PPE/PA, G.F. 30%
RS-2	SLIDE - RIGHT-2	BLACK	KINGFA PBT W/PTFE G.F. 30%
LS	SLIDE - LEFT	BLACK	PPE/PA, G.F. 30%
CVR BLACK	DRESS COVER BLACK	BLACK	PBT, G.F. 30%
LS-2	SLIDE - LEFT-2	BLACK	KINGFA PBT W/PTFE G.F. 30%
CPA	CONNECTOR POSITION ASSURANCE (CPA)	RED	PPE/PA 10% GF
CPA-2	CONNECTOR POSITION ASSURANCE (CPA)	RED	PPE/PA 10% GF
MSEAL	MAT SEAL	RUST RED	INHERENTLY LUBRICATED SILICONE RUBBER
RSEAL	RING SEAL	RUST RED	INHERENTLY LUBRICATED SILICONE RUBBER

FOR ADDITIONAL INFOMRATION SEE SD-34576-001

ASSEMBLY DESCRIPTION	ASSEMBLY PART NUMBER	CONNECTOR HOUSING	GROMMET CAP	TPA	RIGHT SLIDE	LEFT SLIDE	MATE ASSIST LEVER	CPA	MAT SEAL	RING SEAL	BLOCKED TERMINALS CAVITY WITH A NUMBER INDICATES BLOCKED TERMINAL POSITION CAVITY WITHOUT A NUMBER INDICATES OPEN TERMINAL POSITION	STATUS	COMMENTS	INTEGRAL COMPONENTS SOLD SEPARATELY DRESS COVER
MX123 CONN ASSY 56 CKT BLU OPT0 KEY G/56	2167420001	C-HSG-G0	G-CAP-0-P	TPA-G0	RS-2	LS-2	MAL-2	CPA-2	MSEAL	RSEAL	- -	SALEABLE	Replacing PN 345760703	345750005
MX123 CONN ASSY 56 CKT GRY OPT0 KEY H/56	2167420002	C-HSG-H0	G-CAP-0-P	TPA-H0	RS-2	LS-2	MAL-2	CPA-2	MSEAL	RSEAL	- -	SALEABLE	Replacing PN 345760803	345750005
MX123 CONN ASSY 56 CKT BLU OPT9 KEY G/56	2167420007	C-HSG-G9	G-CAP-9-P	TPA-G9	RS-2	LS-2	MAL-2	CPA-2	MSEAL	RSEAL	- -	SALEABLE	Replacing PN 345761903	345750005

molex

MX123 SEALED RCPT ASSY (56 CKT)
BOM & PIN OUT SHEET

ASSEMBLY DESCRIPTION	ASSEMBLY PART NUMBER	CONNECTOR HOUSING	GROMMET CAP	TPA	RIGHT SLIDE	LEFT SLIDE	MATE ASSIST LEVER	CPA	MAT SEAL	RING SEAL	BLOCKED TERMINALS CAVITY WITH A NUMBER INDICATES BLOCKED TERMINAL POSITION CAVITY WITHOUT A NUMBER INDICATES OPEN TERMINAL POSITION	STATUS	COMMENTS	INTEGRAL COMPONENTS SOLD SEPARATELY DRESS COVER
MX123 CONN ASSY 56 CKT GRY OPT9 KEY H/56	2167420008	C-HSG-H9	G-CAP-9-P	TPA-H9	RS-2	LS-2	MAL-2	CPA-2	MSEAL	RSEAL	- -	SALEABLE	Replacing PN 345762003	345750005
MX123 CONN ASSY 56 CKT BLU OPT0 KEY G/33	2167420013	C-HSG-G0	G-CAP-0-P	TPA-G0	RS-2	LS-2	MAL-2	CPA-2	MSEAL	RSEAL	- - - - 52 51 50 - - - 46 45 - 43 42 41 - 39 38 - - - - - 32 31 30 29 28 27 26 25 24 23 22 21 - - - 17 16 15 14 - - 11 10 - 8 - - 5 4 3 - 1	SALEABLE	Replacing PN 345762503	345750005
MX123 CONN ASSY 56 CKT BLU OPT0 KEY G/34	2167420014	C-HSG-G0	G-CAP-0-P	TPA-G0	RS-2	LS-2	MAL-2	CPA-2	MSEAL	RSEAL	- - - - 52 51 50 - - - 46 45 - 43 42 41 - 39 38 - - - - - 32 31 30 29 28 27 26 25 24 23 22 21 - - - 17 16 15 14 - - 11 10 - 8 - - 5 4 3 2 1	SALEABLE	Replacing PN 345762603	345750005
MX123 CONN ASSY 56 CKT BLU OPT0 KEY G/56	2167420015	C-HSG-G0	G-CAP-0-P	TPA-G0	RS-2	LS-2	MAL-2	CPA-2	MSEAL	RSEAL	56 55 54 53 52 51 50 49 48 47 46 45 44 43 42 41 40 39 38 37 36 35 34 33 32 31 30 29 28 27 26 25 24 23 22 21 20 19 18 17 16 15 14 13 12 11 10 9 8 7 6 5 4 3 2 1	SALEABLE	Replacing PN 345762703	345750005
MX123 CONN ASSY 56 CKT BLU OPT0 KEY G/34	2167420016	C-HSG-G0	G-CAP-0-P	TPA-G0	RS-2	LS-2	MAL-2	CPA-2	MSEAL	RSEAL	56 - - - 52 - 50 - - - 46 45 - 43 42 41 - 39 38 - - - - - 32 31 30 29 28 27 - 25 24 23 22 21 - - - 17 16 15 14 - - 11 10 - 8 - 6 5 4 3 2 1	SALEABLE	Replacing PN 345762803	345750005
MX123 CONN ASSY 56 CKT BLU OPT0 KEY G/31	2167420017	C-HSG-G0	G-CAP-0-P	TPA-G0	RS-2	LS-2	MAL-2	CPA-2	MSEAL	RSEAL	- - 54 - 52 51 50 - - - - - - 43 42 41 - - 38 - - - - - 32 31 - 29 28 27 26 - 24 23 22 21 - - - 17 16 15 14 - - 11 10 - 8 - 6 5 4 3 2 1	SALEABLE	Replacing PN 345762903	345750005
MX123 CONN ASSY 56 CKT BLU OPT0 KEY G/30	2167420018	C-HSG-G0	G-CAP-0-P	TPA-G0	RS-2	LS-2	MAL-2	CPA-2	MSEAL	RSEAL	- - - - 52 51 50 - - - 46 45 - 43 42 41 - 39 38 - - - - - 32 31 30 - 28 27 26 25 24 23 22 21 - - - 17 - - 14 - - 11 10 - 8 - - 5 4 3 - 1	SALEABLE	Replacing PN 345763003	345750005
MX123 CONN ASSY 56 CKT BLU OPT0 KEY G/32	2167420019	C-HSG-G0	G-CAP-0-P	TPA-G0	RS-2	LS-2	MAL-2	CPA-2	MSEAL	RSEAL	- - - - 52 51 50 - - - - - - 43 42 41 - - 38 - - - - - 32 31 30 29 28 27 26 25 24 23 22 21 - - - 17 16 15 14 - - 11 10 - 8 - 6 5 4 3 2 1	SALEABLE	Replacing PN 345763103	345750005
MX123 CONN ASSY 56 CKT BLU OPT0 KEY G/32	2167420020	C-HSG-G0	G-CAP-0-P	TPA-G0	RS-2	LS-2	MAL-2	CPA-2	MSEAL	RSEAL	56 - - - 52 51 50 - - - - 45 - 43 42 41 - 39 38 - - - - - - - 30 29 28 27 - 25 24 23 22 21 - - - 17 16 15 14 - - 11 10 - 8 - 6 5 4 3 2 1	SALEABLE	Replacing PN 345763203	345750005
MX123 CONN ASSY 56 CKT BLU OPT0 KEY G/35	2167420021	C-HSG-G0	G-CAP-0-P	TPA-G0	RS-2	LS-2	MAL-2	CPA-2	MSEAL	RSEAL	- - - 53 52 51 50 - - - 46 45 - 43 42 41 - 39 38 - - - - - 32 31 30 29 28 27 26 25 24 23 22 21 - - - 17 16 15 14 - - 11 10 - 8 - - 5 4 3 2 1	SALEABLE	Replacing PN 345763303	345750005
MX123 CONN ASSY 56 CKT BLU OPT0 KEY G/34	2167420022	C-HSG-G0	G-CAP-0-P	TPA-G0	RS-2	LS-2	MAL-2	CPA-2	MSEAL	RSEAL	56 - - - 52 51 50 - - - 46 45 - 43 42 41 - - 38 - - - - - 32 31 30 29 28 27 - 25 24 23 22 21 - - - 17 16 15 14 - - 11 10 - 8 - 6 5 4 3 2 1	SALEABLE	Replacing PN 345763403	345750005
MX123 CONN ASSY 56 CKT BLU OPT0 KEY G/34	2167420023	C-HSG-G0	G-CAP-0-P	TPA-G0	RS-2	LS-2	MAL-2	CPA-2	MSEAL	RSEAL	- - 54 - 52 51 50 - - - 46 45 - 43 42 41 - 39 38 - - - - - 32 31 30 29 28 27 26 25 24 23 22 21 - - - 17 16 15 14 - - 11 10 - 8 - - 5 4 3 - 1	SALEABLE	Replacing PN 345763503	345750005

molex

MX123 SEALED RCPT ASSY (56 CKT)
BOM & PIN OUT SHEET

ASSEMBLY DESCRIPTION	ASSEMBLY PART NUMBER	CONNECTOR HOUSING	GROMMET CAP	TPA	RIGHT SLIDE	LEFT SLIDE	MATE ASSIST LEVER	CPA	MAT SEAL	RING SEAL	BLOCKED TERMINALS CAVITY WITH A NUMBER INDICATES BLOCKED TERMINAL POSITION CAVITY WITHOUT A NUMBER INDICATES OPEN TERMINAL POSITION														STATUS	COMMENTS	INTEGRAL COMPONENTS SOLD SEPARATELY DRESS COVER
MX123 CONN ASSY 56 CKT BLU OPT0 KEY G/35	2167420024	C-HSG-G0	G-CAP-0-P	TPA-G0	RS-2	LS-2	MAL-2	CPA-2	MSEAL	RSEAL	56	-	-	-	52	51	50	-	-	-	46	45	-	43	SALEABLE	Replacing PN 345763603	345750005
											42	41	-	39	38	-	-	-	-	-	32	31	30	29			
											28	27	-	25	24	23	22	21	-	-	-	17	16	15			
											14	-	-	11	10	-	8	-	6	5	4	3	2	1			
MX123 CONN ASSY 56 CKT BLU OPT0 KEY G/30	2167420025	C-HSG-G0	G-CAP-0-P	TPA-G0	RS-2	LS-2	MAL-2	CPA-2	MSEAL	RSEAL	-	-	-	-	52	-	50	-	-	-	46	45	-	43	SALEABLE	Replacing PN 345763703	345750005
											42	41	-	39	38	-	-	-	-	-	32	31	30	-			
											28	27	26	25	24	23	22	21	-	-	-	17	-	-			
											14	-	-	11	10	-	8	-	-	5	4	3	-	1			
MX123 CONN ASSY 56 CKT BLU OPT0 KEY G/30	2167420026	C-HSG-G0	G-CAP-0-P	TPA-G0	RS-2	LS-2	MAL-2	CPA-2	MSEAL	RSEAL	-	55	-	-	52	51	50	-	48	-	-	45	-	43	SALEABLE	Replacing PN 345763803	345750005
											42	41	-	-	38	-	-	-	34	-	-	-	30	-			
											28	27	26	-	24	23	22	21	-	-	-	17	16	-			
											14	-	-	11	10	-	8	-	6	5	4	3	-	1			
MX123 CONN ASSY 56 CKT BLU OPT0 KEY G/34	2167420027	C-HSG-G0	G-CAP-0-P	TPA-G0	RS-2	LS-2	MAL-2	CPA-2	MSEAL	RSEAL	-	55	-	-	52	51	50	-	48	-	46	45	-	43	SALEABLE	Replacing PN 345763903	345750005
											42	41	-	-	38	-	-	-	34	-	32	31	30	-			
											28	27	26	-	24	23	22	21	-	-	-	17	16	-			
											14	-	-	11	10	-	8	-	6	5	4	3	2	1			
MX123 CONN ASSY 56 CKT BLU OPT0 KEY G/27	2167420028	C-HSG-G0	G-CAP-0-P	TPA-G0	RS-2	LS-2	MAL-2	CPA-2	MSEAL	RSEAL	-	-	-	-	52	51	50	-	-	-	46	-	-	43	SALEABLE	Replacing PN 345764003	345750005
											42	41	-	-	38	-	-	-	-	-	32	31	30	-			
											28	27	26	-	24	23	22	21	-	-	-	17	-	-			
											14	-	-	11	10	-	8	-	-	5	4	3	2	-			
MX123 CONN ASSY 56 CKT BLU OPT0 KEY G/27	2167420029	C-HSG-G0	G-CAP-0-P	TPA-G0	RS-2	LS-2	MAL-2	CPA-2	MSEAL	RSEAL	-	-	-	-	52	51	50	-	-	-	-	45	-	43	SALEABLE	Replacing PN 345764103	345750005
											42	41	-	-	-	-	-	-	-	-	-	-	30	-			
											28	27	26	-	24	23	22	21	-	-	-	17	-	15			
											14	-	-	11	10	-	8	-	6	5	4	3	2	1			
MX123 CONN ASSY 56 CKT BLU OPT0 KEY G/33	2167420030	C-HSG-G0	G-CAP-0-P	TPA-G0	RS-2	LS-2	MAL-2	CPA-2	MSEAL	RSEAL	-	-	-	-	52	51	50	-	-	-	46	-	-	43	SALEABLE	Replacing PN 345764203	345750005
											42	41	-	-	38	-	-	-	-	-	32	31	30	29			
											28	27	26	25	24	23	22	21	-	-	-	17	16	15			
											14	-	-	11	10	-	8	-	6	5	4	3	2	1			
MX123 CONN ASSY 56 CKT BLU OPT0 KEY G/22	2167420031	C-HSG-G0	G-CAP-0-P	TPA-G0	RS-2	LS-2	MAL-2	CPA-2	MSEAL	RSEAL	-	-	-	-	52	-	50	-	-	-	46	-	-	43	SALEABLE	Replacing PN 345764303	345750005
											42	-	-	39	-	-	-	-	-	-	32	31	-	29			
											28	27	-	-	-	23	-	-	-	-	18	-	16	15			
											14	-	-	11	10	-	8	-	6	5	-	-	2	-			
MX123 CONN ASSY 56 CKT BLU OPT0 KEY G/29	2167420032	C-HSG-G0	G-CAP-0-P	TPA-G0	RS-2	LS-2	MAL-2	CPA-2	MSEAL	RSEAL	-	-	-	-	52	51	50	-	-	-	-	45	-	43	SALEABLE	Replacing PN 345764403	345750005
											42	41	-	-	38	-	-	-	-	-	-	-	30	-			
											28	27	26	-	24	23	22	21	-	-	-	17	-	15			
											14	13	-	11	10	-	8	-	6	5	4	3	2	1			
MX123 CONN ASSY 56 CKT BLU OPT0 KEY G/23	2167420033	C-HSG-G0	G-CAP-0-P	TPA-G0	RS-2	LS-2	MAL-2	CPA-2	MSEAL	RSEAL	-	-	54	-	52	51	50	-	-	-	-	45	-	43	SALEABLE	Replacing PN 345764503	345750005
											42	41	-	-	38	-	-	-	-	-	-	-	-	29			
											28	27	26	-	-	23	-	-	-	-	-	17	-	15			
											14	-	-	11	10	-	8	-	6	5	-	3	-	-			
MX123 CONN ASSY 56 CKT BLU OPT0 KEY G/28	2167420034	C-HSG-G0	G-CAP-0-P	TPA-G0	RS-2	LS-2	MAL-2	CPA-2	MSEAL	RSEAL	-	-	-	-	52	51	50	-	-	-	-	45	-	43	SALEABLE	Replacing PN 345764603	345750005
											42	41	-	-	38	-	-	-	-	-	-	-	30	-			
											28	27	26	-	24	23	22	21	-	-	-	17	-	15			
											14	-	-	11	10	-	8	-	6	5	4	3	2	1			
MX123 CONN ASSY 56 CKT BLU OPT0 KEY G/25	2167420035	C-HSG-G0	G-CAP-0-P	TPA-G0	RS-2	LS-2	MAL-2	CPA-2	MSEAL	RSEAL	-	-	54	-	52	-	50	-	-	-	46	45	-	43	SALEABLE	Replacing PN 345764703	345750005
											42	41	-	-	38	-	-	-	-	-	32	31	-	29			
											28	27	26	-	24	23	-	-	-	-	-	17	-	-			
											14	-	-	11	10	-	8	-	6	5	-	3	-	-			

molex

MX123 SEALED RCPT ASSY (56 CKT)
BOM & PIN OUT SHEET

ASSEMBLY DESCRIPTION	ASSEMBLY PART NUMBER	CONNECTOR HOUSING	GROMMET CAP	TPA	RIGHT SLIDE	LEFT SLIDE	MATE ASSIST LEVER	CPA	MAT SEAL	RING SEAL	BLOCKED TERMINALS CAVITY WITH A NUMBER INDICATES BLOCKED TERMINAL POSITION CAVITY WITHOUT A NUMBER INDICATES OPEN TERMINAL POSITION														STATUS	COMMENTS	INTEGRAL COMPONENTS SOLD SEPARATELY DRESS COVER
MX123 CONN ASSY 56 CKT BLU OPT0 KEY G/29	2167420036	C-HSG-G0	G-CAP-0-P	TPA-G0	RS-2	LS-2	MAL-2	CPA-2	MSEAL	RSEAL	56	-	54	-	52	-	50	-	-	-	46	45	-	43	SALEABLE	Replacing PN 345764803	345750005
											42	41	-	-	38	-	-	-	-	-	32	31	30	-			
											28	27	-	25	24	23	22	21	-	-	-	17	-	-			
											14	-	-	11	10	-	8	-	6	5	-	3	-	1			
MX123 CONN ASSY 56 CKT BLU OPT9 KEY G/32	2167420037	C-HSG-G9	G-CAP-9-P	TPA-G9	RS-2	LS-2	MAL-2	CPA-2	MSEAL	RSEAL	56	-	-	-	52	51	50	-	-	-	-	45	-	43	SALEABLE	Replacing PN 345764903	345750005
											42	41	-	39	38	-	-	-	-	-	-	-	30	29			
											28	27	-	25	24	23	22	21	-	-	-	17	16	15			
											14	-	-	11	10	-	8	-	6	5	4	3	2	1			
MX123 CONN ASSY 56 CKT BLU OPT0 KEY G/34	2167420038	C-HSG-G0	G-CAP-0-P	TPA-G0	RS-2	LS-2	MAL-2	CPA-2	MSEAL	RSEAL	56	-	-	-	52	51	50	-	-	-	46	-	-	43	SALEABLE	Replacing PN 345765003	345750005
											42	41	-	39	38	-	-	-	-	-	32	31	30	29			
											28	27	-	25	24	23	22	21	-	-	-	17	16	15			
											14	-	-	11	10	-	8	-	6	5	4	3	2	1			
MX123 CONN ASSY 56 CKT BLU OPT0 KEY G/29	2167420039	C-HSG-G0	G-CAP-0-P	TPA-G0	RS-2	LS-2	MAL-2	CPA-2	MSEAL	RSEAL	56	-	54	-	52	-	50	-	-	-	46	45	-	43	SALEABLE	Replacing PN 345765103	345750005
											42	41	-	39	38	-	-	-	-	-	32	31	30	-			
											28	27	-	25	-	23	22	21	-	-	-	17	-	-			
											14	-	-	11	10	-	8	-	6	5	-	3	-	1			
MX123 CONN ASSY 56 CKT BLU OPT0 KEY G/32	2167420040	C-HSG-G0	G-CAP-0-P	TPA-G0	RS-2	LS-2	MAL-2	CPA-2	MSEAL	RSEAL	-	-	-	-	52	51	50	-	-	-	46	45	-	43	SALEABLE	Replacing PN 345765203	345750005
											42	41	-	-	38	-	-	-	-	-	32	31	30	-			
											28	27	26	25	24	23	22	21	-	-	-	17	16	-			
											14	-	-	11	10	-	8	-	6	5	4	3	2	1			
MX123 CONN ASSY 56 CKT BLU OPT9 KEY G/56	2167420041	C-HSG-G9	G-CAP-9-P	TPA-G9	RS-2	LS-2	MAL-2	CPA-2	MSEAL	RSEAL	56	55	54	53	52	51	50	49	48	47	46	45	44	43	SALEABLE	Replacing PN 345765303	345750005
											42	41	40	39	38	37	36	35	34	33	32	31	30	29			
											28	27	26	25	24	23	22	21	20	19	18	17	16	15			
											14	13	12	11	10	9	8	7	6	5	4	3	2	1			
MX123 CONN ASSY 56 CKT BLU OPT0 KEY G/26	2167420042	C-HSG-G0	G-CAP-0-P	TPA-G0	RS-2	LS-2	MAL-2	CPA-2	MSEAL	RSEAL	56	-	54	-	52	-	50	-	-	-	46	45	-	43	SALEABLE	Replacing PN 345765403	345750005
											42	41	-	-	38	-	-	-	-	-	32	31	-	29			
											28	27	-	-	24	23	-	-	-	-	-	17	-	15			
											14	-	-	11	10	-	8	-	6	5	-	3	-	-			
MX123 CONN ASSY 56 CKT BLU OPT0 KEY G/26	2167420043	C-HSG-G0	G-CAP-0-P	TPA-G0	RS-2	LS-2	MAL-2	CPA-2	MSEAL	RSEAL	-	-	54	-	52	-	50	-	-	-	46	45	-	43	SALEABLE	Replacing PN 345765503	345750005
											42	41	-	-	38	-	-	-	-	-	32	31	-	29			
											28	27	26	-	24	23	-	-	-	-	-	17	-	15			
											14	-	-	11	10	-	8	-	6	5	-	3	-	-			
MX123 CONN ASSY 56 CKT BLU OPT0 KEY G/24	2167420044	C-HSG-G0	G-CAP-0-P	TPA-G0	RS-2	LS-2	MAL-2	CPA-2	MSEAL	RSEAL	-	-	54	-	52	51	50	-	-	-	-	45	-	43	SALEABLE	Replacing PN 345765603	345750005
											42	41	-	-	38	-	-	-	-	-	-	-	-	29			
											28	27	26	-	24	23	-	-	-	-	-	17	-	15			
											14	-	-	11	10	-	8	-	6	5	-	3	-	-			
MX123 CONN ASSY 56 CKT BLU OPT0 KEY G/24	2167420045	C-HSG-G0	G-CAP-0-P	TPA-G0	RS-2	LS-2	MAL-2	CPA-2	MSEAL	RSEAL	56	-	54	-	52	51	50	-	-	-	-	45	-	43	SALEABLE	Replacing PN 345765703	345750005
											42	41	-	-	38	-	-	-	-	-	-	-	-	29			
											28	27	-	-	24	23	-	-	-	-	-	17	-	15			
											14	-	-	11	10	-	8	-	6	5	-	3	-	-			
MX123 CONN ASSY 56 CKT BLU OPT0 KEY G/32	2167420046	C-HSG-G0	G-CAP-0-P	TPA-G0	RS-2	LS-2	MAL-2	CPA-2	MSEAL	RSEAL	56	-	54	-	52	51	50	-	-	-	-	-	-	43	SALEABLE	Replacing PN 345765803	345750005
											42	41	-	-	38	-	-	-	-	-	32	31	30	29			
											28	27	-	-	24	23	22	21	-	-	-	17	16	15			
											14	-	-	11	10	-	8	-	6	5	4	3	2	1			
MX123 CONN ASSY 56 CKT BLU OPT0 KEY G/26	2167420047	C-HSG-G0	G-CAP-0-P	TPA-G0	RS-2	LS-2	MAL-2	CPA-2	MSEAL	RSEAL	-	55	54	-	-	51	50	49	48	-	46	-	44	-	SALEABLE	Replacing PN 345765903	345750005
											42	-	-	-	-	37	36	35	-	-	32	-	-	-			
											-	-	-	-	-	23	22	21	-	-	-	17	-	15			
											14	-	-	-	-	9	8	7	6	5	4	-	-	1			

molex

MX123 SEALED RCPT ASSY (56 CKT)
BOM & PIN OUT SHEET

ASSEMBLY DESCRIPTION	ASSEMBLY PART NUMBER	CONNECTOR HOUSING	GROMMET CAP	TPA	RIGHT SLIDE	LEFT SLIDE	MATE ASSIST LEVER	CPA	MAT SEAL	RING SEAL	BLOCKED TERMINALS CAVITY WITH A NUMBER INDICATES BLOCKED TERMINAL POSITION CAVITY WITHOUT A NUMBER INDICATES OPEN TERMINAL POSITION														STATUS	COMMENTS	INTEGRAL COMPONENTS SOLD SEPARATELY DRESS COVER
MX123 CONN ASSY 56 CKT BLU OPT0 KEY G/23	2167420048	C-HSG-G0	G-CAP-0-P	TPA-G0	RS-2	LS-2	MAL-2	CPA-2	MSEAL	RSEAL	-	55	54	-	-	51	-	49	48	-	46	-	44	-	SALEABLE	Replacing PN 345766003	345750005
											42	41	-	-	-	37	36	35	-	-	32	-	-	-			
											-	-	-	-	-	23	22	21	-	-	-	17	-	15			
											-	-	-	-	-	9	8	7	6	-	-	-	-	1			
MX123 CONN ASSY 56 CKT BLU OPT0 KEY G/28	2167420049	C-HSG-G0	G-CAP-0-P	TPA-G0	RS-2	LS-2	MAL-2	CPA-2	MSEAL	RSEAL	-	-	-	-	52	-	50	-	-	-	46	45	-	43	SALEABLE	Replacing PN 345766103	345750005
											42	41	-	-	38	-	-	-	-	-	32	31	30	-			
											28	27	26	25	24	23	22	21	-	-	-	17	-	-			
											14	-	-	11	10	-	8	-	6	5	-	3	-	1			
MX123 CONN ASSY 56 CKT BLU OPT0 KEY G/33	2167420050	C-HSG-G0	G-CAP-0-P	TPA-G0	RS-2	LS-2	MAL-2	CPA-2	MSEAL	RSEAL	56	-	-	-	52	51	50	-	-	-	-	-	-	43	SALEABLE	Replacing PN 345766203	345750005
											42	41	-	39	38	-	-	-	-	-	32	31	30	29			
											28	27	-	25	24	23	22	21	-	-	-	17	16	15			
											14	-	-	11	10	-	8	-	6	5	4	3	2	1			
MX123 CONN ASSY 56 CKT BLU OPT0 KEY G/28	2167420051	C-HSG-G0	G-CAP-0-P	TPA-G0	RS-2	LS-2	MAL-2	CPA-2	MSEAL	RSEAL	56	-	-	-	52	-	50	-	-	-	46	45	-	43	SALEABLE	Replacing PN 345766303	345750005
											42	41	-	-	38	-	-	-	-	-	32	31	30	-			
											28	27	-	25	24	23	22	21	-	-	-	17	-	-			
											14	-	-	11	10	-	8	-	6	5	-	3	-	1			
MX123 CONN ASSY 56 CKT BLU OPT0 KEY G/34	2167420052	C-HSG-G0	G-CAP-0-P	TPA-G0	RS-2	LS-2	MAL-2	CPA-2	MSEAL	RSEAL	56	-	-	53	52	51	50	-	-	-	46	45	-	43	SALEABLE	Replacing PN 345766403	345750005
											42	-	-	39	38	-	-	-	-	-	32	31	30	29			
											28	27	26	25	24	23	22	21	-	-	-	17	16	15			
											14	-	-	11	10	-	-	-	6	5	4	-	2	1			
MX123 CONN ASSY 56 CKT BLU OPT0 KEY G/24	2167420053	C-HSG-G0	G-CAP-0-P	TPA-G0	RS-2	LS-2	MAL-2	CPA-2	MSEAL	RSEAL	56	55	-	53	52	51	50	49	48	-	-	-	44	-	SALEABLE	Replacing PN 345766503	345750005
											42	-	-	-	-	-	36	35	34	-	-	-	-	-			
											-	-	-	-	-	-	22	21	-	-	-	17	-	15			
											14	-	-	-	-	-	8	7	6	5	4	-	-	1			
MX123 CONN ASSY 56 CKT BLU OPT0 KEY G/23	2167420054	C-HSG-G0	G-CAP-0-P	TPA-G0	RS-2	LS-2	MAL-2	CPA-2	MSEAL	RSEAL	56	55	-	53	52	51	50	49	48	-	-	-	44	-	SALEABLE	Replacing PN 345766603	345750005
											42	-	-	-	-	-	36	35	-	-	-	-	-	-			
											-	-	-	-	-	-	22	21	-	-	-	17	-	15			
											14	-	-	-	-	-	8	7	6	5	4	-	-	1			
MX123 CONN ASSY 56 CKT BLU OPT0 KEY G/32	2167420055	C-HSG-G0	G-CAP-0-P	TPA-G0	RS-2	LS-2	MAL-2	CPA-2	MSEAL	RSEAL	56	-	54	53	-	-	50	49	-	47	-	-	44	-	SALEABLE	Replacing PN 345766703	345750005
											42	-	-	-	-	37	36	35	34	-	-	-	-	-			
											-	27	-	-	-	23	22	21	-	-	-	17	-	-			
											14	-	-	-	-	9	8	7	6	5	4	-	-	-			
MX123 CONN ASSY 56 CKT BLU OPT0 KEY G/30	2167420056	C-HSG-G0	G-CAP-0-P	TPA-G0	RS-2	LS-2	MAL-2	CPA-2	MSEAL	RSEAL	56	55	54	53	-	51	50	49	-	47	-	-	44	-	SALEABLE	Replacing PN 345766803	345750005
											42	-	-	-	-	37	36	35	34	-	-	-	-	-			
											-	27	-	-	-	23	22	21	-	-	-	17	-	-			
											14	-	-	-	-	9	8	7	6	5	4	-	-	-			
MX123 CONN ASSY 56 CKT BLU OPT0 KEY G/29	2167420057	C-HSG-G0	G-CAP-0-P	TPA-G0	RS-2	LS-2	MAL-2	CPA-2	MSEAL	RSEAL	-	-	-	-	52	-	-	-	48	-	46	45	-	43	SALEABLE	Replacing PN 345766813	345750005
											-	41	40	-	38	-	-	-	-	33	32	31	30	29			
											28	-	26	-	24	-	-	-	20	19	18	-	16	15			
											-	13	12	-	10	-	-	-	-	-	-	3	2	1			
MX123 CONN ASSY 56 CKT BLU OPT0 KEY G/27	2167420058	C-HSG-G0	G-CAP-0-P	TPA-G0	RS-2	LS-2	MAL-2	CPA-2	MSEAL	RSEAL	-	55	-	-	52	51	-	-	48	-	46	45	-	43	SALEABLE	Replacing PN 345766823	345750005
											-	41	40	-	38	-	-	-	-	33	32	31	30	29			
											28	-	26	-	24	-	-	-	20	19	18	-	16	15			
											-	13	12	-	10	-	-	-	-	-	-	3	2	1			
MX123 CONN ASSY 56 CKT BLU OPT0 KEY G/16	2167420059	C-HSG-G0	G-CAP-0-P	TPA-G0	RS-2	LS-2	MAL-2	CPA-2	MSEAL	RSEAL	-	55	-	-	52	51	-	-	48	-	46	45	44	43	SALEABLE	Replacing PN 345766833	345750005
											42	41	40	39	38	37	36	35	34	33	32	31	30	29			
											28	27	26	25	24	23	22	-	20	19	18	-	16	15			
											-	13	12	-	10	-	-	-	-	-	-	3	2	1			

molex

MX123 SEALED RCPT ASSY (56 CKT)
BOM & PIN OUT SHEET

ASSEMBLY DESCRIPTION	ASSEMBLY PART NUMBER	CONNECTOR HOUSING	GROMMET CAP	TPA	RIGHT SLIDE	LEFT SLIDE	MATE ASSIST LEVER	CPA	MAT SEAL	RING SEAL	BLOCKED TERMINALS CAVITY WITH A NUMBER INDICATES BLOCKED TERMINAL POSITION CAVITY WITHOUT A NUMBER INDICATES OPEN TERMINAL POSITION														STATUS	COMMENTS	INTEGRAL COMPONENTS SOLD SEPARATELY DRESS COVER
MX123 CONN ASSY 56 CKT BLU OPT0 KEY G/35	2167420060	C-HSG-G0	G-CAP-0-P	TPA-G0	RS-2	LS-2	MAL-2	CPA-2	MSEAL	RSEAL	-	55	-	-	-	51	50	49	48	-	-	-	44	-	SALEABLE	Replacing PN 345766843	345750005
											42	-	-	-	-	-	36	35	34	-	-	-	-	-			
											-	-	-	-	-	-	22	21	-	-	-	17	-	15			
											14	-	-	-	-	-	8	7	6	5	4	-	-	1			
MX123 CONN ASSY 56 CKT BLU OPT0 KEY G/36	2167420061	C-HSG-G0	G-CAP-0-P	TPA-G0	RS-2	LS-2	MAL-2	CPA-2	MSEAL	RSEAL	-	55	-	-	-	51	50	49	48	-	-	-	44	-	SALEABLE	Replacing PN 345766853	345750005
											42	-	-	-	-	-	36	35	-	-	-	-	-	-			
											-	-	-	-	-	-	22	21	-	-	-	17	-	15			
											14	-	-	-	-	-	8	7	6	5	4	-	-	1			
MX123 CONN ASSY 56 CKT BLU OPT0 KEY G/29	2167420062	C-HSG-G0	G-CAP-0-P	TPA-G0	RS-2	LS-2	MAL-2	CPA-2	MSEAL	RSEAL	56	-	54	53	-	-	50	49	-	47	-	-	44	-	SALEABLE	Replacing PN 345766863	345750005
											42	-	-	39	-	37	36	35	34	-	-	-	-	-			
											-	27	-	25	-	23	22	21	-	-	-	17	-	-			
											14	-	-	11	-	9	8	7	6	5	4	-	-	-			
MX123 CONN ASSY 56 CKT BLU OPT0 KEY G/27	2167420063	C-HSG-G0	G-CAP-0-P	TPA-G0	RS-2	LS-2	MAL-2	CPA-2	MSEAL	RSEAL	56	55	54	53	-	51	50	49	-	47	-	-	44	-	SALEABLE	Replacing PN 345766873	345750005
											42	-	-	39	-	37	36	35	34	-	-	-	-	-			
											-	27	-	25	-	23	22	21	-	-	-	17	-	-			
											14	-	-	11	-	9	8	7	6	5	4	-	-	-			
MX123 CONN ASSY 56 CKT BLU OPT0 KEY G/35	2167420064	C-HSG-G0	G-CAP-0-P	TPA-G0	RS-2	LS-2	MAL-2	CPA-2	MSEAL	RSEAL	-	55	-	53	-	51	50	49	48	-	-	-	44	-	SALEABLE	Replacing PN 345766883	345750005
											42	-	-	-	-	-	36	35	-	-	-	-	-	-			
											-	-	-	-	-	-	22	21	-	-	-	17	-	15			
											14	-	-	-	-	-	8	7	6	5	4	-	-	1			
MX123 CONN ASSY 56 CKT BLU OPT0 KEY G/29	2167420065	C-HSG-G0	G-CAP-0-P	TPA-G0	RS-2	LS-2	MAL-2	CPA-2	MSEAL	RSEAL	56	55	-	-	52	51	50	49	48	-	-	-	44	43	SALEABLE	Replacing PN 345766893	345750005
											42	-	-	39	-	37	36	35	34	-	-	-	-	-			
											-	-	-	-	-	23	22	21	-	-	-	17	-	15			
											14	-	-	-	-	9	-	7	6	5	4	-	-	1			
MX123 CONN ASSY 56 CKT BLU OPT9 KEY G/30	2167420066	C-HSG-G9	G-CAP-9-P	TPA-G9	RS-2	LS-2	MAL-2	CPA-2	MSEAL	RSEAL	56	55	-	-	52	51	50	49	48	-	-	-	44	-	SALEABLE	Replacing PN 345766913	345750005
											42	-	-	39	-	37	36	35	34	-	-	-	-	-			
											-	-	-	-	-	23	22	21	-	-	-	17	-	15			
											14	-	-	-	-	9	-	7	6	5	4	-	-	1			
MX123 CONN ASSY 56 CKT BLU OPT9 KEY G/33	2167420067	C-HSG-G9	G-CAP-9-P	TPA-G9	RS-2	LS-2	MAL-2	CPA-2	MSEAL	RSEAL	56	55	-	-	52	51	50	49	48	-	-	-	44	-	SALEABLE	Replacing PN 345766923	345750005
											42	-	-	-	-	37	36	35	34	-	-	-	-	-			
											-	-	-	-	-	-	22	21	-	-	-	17	-	15			
											14	-	-	-	-	-	-	7	6	5	4	-	-	1			
MX123 CONN ASSY 56 CKT BLU OPT0 KEY G/23	2167420068	C-HSG-G0	G-CAP-0-P	TPA-G0	RS-2	LS-2	MAL-2	CPA-2	MSEAL	RSEAL	56	-	-	-	52	51	50	-	-	-	-	-	-	43	SALEABLE	Replacing PN 345766933	345750005
											42	41	-	39	38	-	-	-	-	-	32	31	30	29			
											28	27	-	25	24	23	22	21	-	-	-	17	16	15			
											14	-	-	11	10	-	8	-	6	5	4	3	2	1			
MX123 CONN ASSY 56 CKT BLU OPT0 KEY G/29	2167420069	C-HSG-G0	G-CAP-0-P	TPA-G0	RS-2	LS-2	MAL-2	CPA-2	MSEAL	RSEAL	56	55	-	-	52	51	50	49	48	-	-	-	44	-	SALEABLE	Replacing PN 345766943	345750005
											42	-	-	39	-	37	36	35	34	-	-	-	-	-			
											-	27	-	-	-	23	22	21	-	-	-	17	-	15			
											14	-	-	-	-	9	-	7	6	5	4	-	-	1			
MX123 CONN ASSY 56 CKT BLU OPT0 KEY G/33	2167420070	C-HSG-G0	G-CAP-0-P	TPA-G0	RS-2	LS-2	MAL-2	CPA-2	MSEAL	RSEAL	56	55	-	-	52	51	50	49	48	-	-	-	44	-	SALEABLE	Replacing PN 345766953	345750005
											42	-	-	-	-	37	36	35	34	-	-	-	-	-			
											-	-	-	-	-	-	22	21	-	-	-	17	-	15			
											14	-	-	-	-	-	-	7	6	5	4	-	-	1			
MX123 CONN ASSY 56 CKT BLU OPT0 KEY G/36	2167420071	C-HSG-G0	G-CAP-0-P	TPA-G0	RS-2	LS-2	MAL-2	CPA-2	MSEAL	RSEAL	-	55	-	-	-	51	50	49	48	-	-	-	44	-	SALEABLE	Replacing PN 345766963	345750005
											42	-	-	-	-	37	36	35	-	-	-	-	-	-			
											-	-	-	-	-	-	22	21	-	-	-	17	-	15			
											14	-	-	-	-	-	-	7	6	5	4	-	-	1			

molex

MX123 SEALED RCPT ASSY (56 CKT)
BOM & PIN OUT SHEET

ASSEMBLY DESCRIPTION	ASSEMBLY PART NUMBER	CONNECTOR HOUSING	GROMMET CAP	TPA	RIGHT SLIDE	LEFT SLIDE	MATE ASSIST LEVER	CPA	MAT SEAL	RING SEAL	BLOCKED TERMINALS CAVITY WITH A NUMBER INDICATES BLOCKED TERMINAL POSITION CAVITY WITHOUT A NUMBER INDICATES OPEN TERMINAL POSITION														STATUS	COMMENTS	INTEGRAL COMPONENTS SOLD SEPARATELY DRESS COVER
MX123 CONN ASSY 56 CKT BLU OPT0 KEY G/33	2167420072	C-HSG-G0	G-CAP-0-P	TPA-G0	RS-2	LS-2	MAL-2	CPA-2	MSEAL	RSEAL	-	55	54	53	-	-	-	49	48	47	46	45	44	-	SALEABLE	Replacing PN 345766973	345750005
											-	-	40	-	-	37	36	35	34	33	-	-	-	-			
											-	-	26	-	-	-	-	-	20	19	18	-	-	-			
											-	13	12	-	-	9	-	7	-	-	-	-	-	-			
MX123 CONN ASSY 56 CKT BLU OPT0 KEY G/28	2167420073	C-HSG-G0	G-CAP-0-P	TPA-G0	RS-2	LS-2	MAL-2	CPA-2	MSEAL	RSEAL	56	55	-	-	52	51	50	49	48	47	-	45	-	43	SALEABLE	Replacing PN 345766983	345750005
											42	41	-	-	-	-	-	35	34	33	-	-	-	29			
											28	27	26	-	-	-	-	-	-	-	18	17	16	15			
											14	13	12	-	-	-	-	-	-	-	-	3	-	1			
MX123 CONN ASSY 56 CKT BLU OPT0 KEY G/34	2167420074	C-HSG-G0	G-CAP-0-P	TPA-G0	RS-2	LS-2	MAL-2	CPA-2	MSEAL	RSEAL	-	-	-	-	-	-	50	49	48	-	-	-	44	-	SALEABLE	Replacing PN 345766993	345750005
											42	-	-	39	-	37	36	35	34	-	-	-	-	-			
											-	-	-	-	-	23	22	21	-	-	-	17	-	15			
											14	-	-	-	-	9	-	7	6	5	4	-	-	1			
MX123 CONN ASSY 56 CKT BLU OPT0 KEY G/33	2167420075	C-HSG-G0	G-CAP-0-P	TPA-G0	RS-2	LS-2	MAL-2	CPA-2	MSEAL	RSEAL	-	-	-	53	-	-	50	49	48	-	-	-	44	-	SALEABLE	Replacing PN 345767003	345750005
											42	-	-	39	-	37	36	35	34	-	-	-	-	-			
											-	-	-	-	-	23	22	21	-	-	-	17	-	15			
											14	-	-	-	-	9	-	7	6	5	4	-	-	1			
MX123 CONN ASSY 56 CKT BLU OPT0 KEY G/34	2167420076	C-HSG-G0	G-CAP-0-P	TPA-G0	RS-2	LS-2	MAL-2	CPA-2	MSEAL	RSEAL	-	-	-	-	-	-	50	49	48	-	-	-	44	-	SALEABLE	Replacing PN 345767013	345750005
											42	-	-	39	-	37	36	35	-	-	-	-	-	-			
											-	-	-	-	-	23	22	21	-	-	-	17	-	15			
											14	-	12	-	-	9	-	7	6	5	4	-	-	1			
MX123 CONN ASSY 56 CKT BLU OPT0 KEY G/34	2167420077	C-HSG-G0	G-CAP-0-P	TPA-G0	RS-2	LS-2	MAL-2	CPA-2	MSEAL	RSEAL	-	-	-	53	-	-	50	49	48	-	-	-	44	-	SALEABLE	Replacing PN 345767023	345750005
											42	-	-	39	-	37	36	35	-	-	-	-	-	-			
											-	-	-	-	-	23	22	21	-	-	-	17	-	15			
											14	-	-	-	-	9	-	7	6	5	4	-	-	1			
MX123 CONN ASSY 56 CKT BLU OPT0 KEY G/32	2167420078	C-HSG-G0	G-CAP-0-P	TPA-G0	RS-2	LS-2	MAL-2	CPA-2	MSEAL	RSEAL	-	55	-	-	-	51	50	49	48	-	-	-	44	-	SALEABLE	Replacing PN 345767033	345750005
											42	-	-	39	-	37	36	35	34	-	-	-	-	-			
											-	-	-	-	-	23	22	21	-	-	-	17	-	15			
											14	-	-	-	-	9	-	7	6	5	4	-	-	1			
MX123 CONN ASSY 56 CKT BLU OPT0 KEY G/31	2167420079	C-HSG-G0	G-CAP-0-P	TPA-G0	RS-2	LS-2	MAL-2	CPA-2	MSEAL	RSEAL	-	55	-	53	-	51	50	49	48	-	-	-	44	-	SALEABLE	Replacing PN 345767043	345750005
											42	-	-	39	-	37	36	35	34	-	-	-	-	-			
											-	-	-	-	-	23	22	21	-	-	-	17	-	15			
											14	-	-	-	-	9	-	7	6	5	4	-	-	1			
MX123 CONN ASSY 56 CKT BLU OPT0 KEY G/33	2167420080	C-HSG-G0	G-CAP-0-P	TPA-G0	RS-2	LS-2	MAL-2	CPA-2	MSEAL	RSEAL	-	55	-	-	-	51	50	49	48	-	-	-	44	-	SALEABLE	Replacing PN 345767053	345750005
											42	-	-	39	-	37	36	35	-	-	-	-	-	-			
											-	-	-	-	-	23	22	21	-	-	-	17	-	15			
											14	-	-	-	-	9	-	7	6	5	4	-	-	1			
MX123 CONN ASSY 56 CKT BLU OPT0 KEY G/32	2167420081	C-HSG-G0	G-CAP-0-P	TPA-G0	RS-2	LS-2	MAL-2	CPA-2	MSEAL	RSEAL	-	55	-	53	-	51	50	49	48	-	-	-	44	-	SALEABLE	Replacing PN 345767063	345750005
											42	-	-	39	-	37	36	35	-	-	-	-	-	-			
											-	-	-	-	-	23	22	21	-	-	-	17	-	15			
											14	-	-	-	-	9	-	7	6	5	4	-	-	1			
MX123 CONN ASSY 56 CKT BLU OPT0 KEY G/31	2167420082	C-HSG-G0	G-CAP-0-P	TPA-G0	RS-2	LS-2	MAL-2	CPA-2	MSEAL	RSEAL	56	55	-	-	-	51	50	49	48	-	-	-	44	-	SALEABLE	Replacing PN 345767073	345750005
											42	-	-	39	-	37	36	35	34	-	-	-	-	-			
											-	-	-	-	-	23	22	21	-	-	-	17	-	15			
											14	-	-	-	-	9	-	7	6	5	4	-	-	1			
MX123 CONN ASSY 56 CKT BLU OPT0 KEY G/32	2167420083	C-HSG-G0	G-CAP-0-P	TPA-G0	RS-2	LS-2	MAL-2	CPA-2	MSEAL	RSEAL	56	55	-	-	-	51	50	49	48	-	-	-	44	-	SALEABLE	Replacing PN 345767083	345750005
											42	-	-	39	-	37	36	35	-	-	-	-	-	-			
											-	-	-	-	-	23	22	21	-	-	-	17	-	15			
											14	-	-	-	-	9	-	7	6	5	4	-	-	1			

molex

MX123 SEALED RCPT ASSY (56 CKT)
BOM & PIN OUT SHEET

ASSEMBLY DESCRIPTION	ASSEMBLY PART NUMBER	CONNECTOR HOUSING	GROMMET CAP	TPA	RIGHT SLIDE	LEFT SLIDE	MATE ASSIST LEVER	CPA	MAT SEAL	RING SEAL	BLOCKED TERMINALS CAVITY WITH A NUMBER INDICATES BLOCKED TERMINAL POSITION CAVITY WITHOUT A NUMBER INDICATES OPEN TERMINAL POSITION														STATUS	COMMENTS	INTEGRAL COMPONENTS SOLD SEPARATELY DRESS COVER
MX123 CONN ASSY 56 CKT BLU OPT0 KEY G/30	2167420084	C-HSG-G0	G-CAP-0-P	TPA-G0	RS-2	LS-2	MAL-2	CPA-2	MSEAL	RSEAL	56	55	-	-	52	51	50	49	48	-	-	-	44	-	SALEABLE	Replacing PN 345767093	345750005
											42	-	-	39	-	37	36	35	34	-	-	-	-	-			
											-	-	-	-	-	23	22	21	-	-	-	17	-	15			
											14	-	-	-	-	9	-	7	6	5	4	-	-	1			
MX123 CONN ASSY 56 CKT BLU OPT0 KEY G/28	2167420085	C-HSG-G0	G-CAP-0-P	TPA-G0	RS-2	LS-2	MAL-2	CPA-2	MSEAL	RSEAL	-	-	54	53	-	-	-	-	-	-	46	-	44	-	SALEABLE	Replacing PN 345767103	345750005
											-	-	40	39	38	37	36	-	-	-	32	31	30	-			
											-	-	-	25	24	23	22	21	20	19	-	-	-	-			
											-	-	-	11	10	9	8	7	6	5	4	-	2	-			
MX123 CONN ASSY 56 CKT BLU OPT0 KEY G/29	2167420086	C-HSG-G0	G-CAP-0-P	TPA-G0	RS-2	LS-2	MAL-2	CPA-2	MSEAL	RSEAL	56	55	-	53	52	51	50	49	48	-	-	-	44	-	SALEABLE	Replacing PN 345767113	345750005
											42	-	-	39	-	37	36	35	34	-	-	-	-	-			
											-	-	-	-	-	23	22	21	-	-	-	17	-	15			
											14	-	-	-	-	9	-	7	6	5	4	-	-	1			
MX123 CONN ASSY 56 CKT BLU OPT0 KEY G/27	2167420087	C-HSG-G0	G-CAP-0-P	TPA-G0	RS-2	LS-2	MAL-2	CPA-2	MSEAL	RSEAL	-	-	54	53	-	-	-	-	-	-	46	-	44	-	SALEABLE	Replacing PN 345767123	345750005
											-	-	40	39	38	37	36	-	-	-	32	31	30	-			
											-	-	-	25	24	23	22	21	20	19	-	17	-	-			
											-	-	-	11	10	9	8	7	6	5	4	-	2	-			
MX123 CONN ASSY 56 CKT BLU OPT9 KEY G/36	2167420088	C-HSG-G9	G-CAP-9-P	TPA-G9	RS-2	LS-2	MAL-2	CPA-2	MSEAL	RSEAL	-	55	-	-	-	51	50	49	48	-	-	-	44	-	SALEABLE	Replacing PN 345767133	345750005
											42	-	-	-	-	37	36	35	-	-	-	-	-	-			
											-	-	-	-	-	-	22	21	-	-	-	17	-	15			
											14	-	-	-	-	-	-	7	6	5	4	-	-	1			
MX123 CONN ASSY 56 CKT BLU OPT9 KEY G/35	2167420089	C-HSG-G9	G-CAP-9-P	TPA-G9	RS-2	LS-2	MAL-2	CPA-2	MSEAL	RSEAL	-	-	-	-	-	-	50	49	48	-	-	-	44	-	SALEABLE	Replacing PN 345767143	345750005
											42	-	-	39	-	37	36	35	-	-	-	-	-	-			
											-	-	-	-	-	23	22	21	-	-	-	17	-	15			
											14	-	-	-	-	9	-	7	6	5	4	-	-	1			
MX123 CONN ASSY 56 CKT BLU OPT9 KEY G/37	2167420090	C-HSG-G9	G-CAP-9-P	TPA-G9	RS-2	LS-2	MAL-2	CPA-2	MSEAL	RSEAL	-	55	-	-	-	51	50	-	48	-	-	-	44	-	SALEABLE	Replacing PN 345767153	345750005
											42	-	-	-	-	37	36	35	-	-	-	-	-	-			
											-	-	-	-	-	-	22	21	-	-	-	17	-	15			
											14	-	-	-	-	-	-	7	6	5	4	-	-	1			
MX123 CONN ASSY 56 CKT BLU OPT0 KEY G/19	2167420091	C-HSG-G0	G-CAP-0-P	TPA-G0	RS-2	LS-2	MAL-2	CPA-2	MSEAL	RSEAL	56	55	54	-	52	51	50	-	48	-	-	-	-	43	SALEABLE	Replacing PN 345767163	345750005
											42	41	-	39	38	-	-	-	34	-	32	31	30	29			
											28	27	-	25	24	23	22	21	-	-	-	17	16	15			
											14	-	-	11	10	-	8	-	6	5	4	3	2	1			
MX123 CONN ASSY 56 CKT BLU OPT9 KEY G/29	2167420092	C-HSG-G9	G-CAP-9-P	TPA-G9	RS-2	LS-2	MAL-2	CPA-2	MSEAL	RSEAL	56	-	54	53	-	-	50	49	-	47	-	-	44	-	SALEABLE	Replacing PN 345767173	345750005
											42	-	-	39	-	37	36	35	34	-	-	-	-	-			
											-	27	-	25	-	23	22	21	-	-	-	17	-	-			
											14	-	-	11	-	9	8	7	6	5	4	-	-	-			
MX123 CONN ASSY 56 CKT BLU OPT0 KEY G/33	2167420093	C-HSG-G0	G-CAP-0-P	TPA-G0	RS-2	LS-2	MAL-2	CPA-2	MSEAL	RSEAL	-	-	54	-	52	51	50	-	-	-	-	45	-	43	SALEABLE	Replacing PN 345767183	345750005
											42	41	-	-	38	-	-	-	-	-	-	-	-	29			
											28	27	26	-	-	23	-	-	-	-	-	17	-	15			
											14	-	-	11	10	-	8	-	6	5	-	3	-	-			
MX123 CONN ASSY 56 CKT BLU OPT9 KEY G/30	2167420094	C-HSG-G9	G-CAP-9-P	TPA-G9	RS-2	LS-2	MAL-2	CPA-2	MSEAL	RSEAL	-	55	-	-	-	51	50	49	48	-	-	-	44	-	SALEABLE	Replacing PN 345767193	345750005
											42	-	-	39	-	37	36	35	-	-	-	-	-	-			
											-	-	-	25	-	23	22	21	-	-	-	17	-	15			
											14	-	-	11	-	9	8	7	6	5	4	-	-	1			
MX123 CONN ASSY 56 CKT BLU OPT0 KEY G/35	2167420095	C-HSG-G0	G-CAP-0-P	TPA-G0	RS-2	LS-2	MAL-2	CPA-2	MSEAL	RSEAL	-	-	-	-	-	-	50	49	48	-	-	-	44	-	SALEABLE	Replacing PN 345767203	345750005
											42	-	-	39	-	37	36	35	-	-	-	-	-	-			
											-	-	-	-	-	23	22	21	-	-	-	17	-	15			
											14	-	-	-	-	9	-	7	6	5	4	-	-	1			

molex

MX123 SEALED RCPT ASSY (56 CKT)
BOM & PIN OUT SHEET

ASSEMBLY DESCRIPTION	ASSEMBLY PART NUMBER	CONNECTOR HOUSING	GROMMET CAP	TPA	RIGHT SLIDE	LEFT SLIDE	MATE ASSIST LEVER	CPA	MAT SEAL	RING SEAL	BLOCKED TERMINALS CAVITY WITH A NUMBER INDICATES BLOCKED TERMINAL POSITION CAVITY WITHOUT A NUMBER INDICATES OPEN TERMINAL POSITION														STATUS	COMMENTS	INTEGRAL COMPONENTS SOLD SEPARATELY DRESS COVER
MX123 CONN ASSY 56 CKT BLU OPT0 KEY G/32	2167420096	C-HSG-G0	G-CAP-0-P	TPA-G0	RS-2	LS-2	MAL-2	CPA-2	MSEAL	RSEAL	-	-	54	53	-	-	-	-	-	-	-	-	44	-	SALEABLE	Replacing PN 345767213	345750005
											-	-	40	39	38	37	36	-	-	-	32	-	30	-			
											-	-	-	25	24	23	22	-	20	-	-	17	-	-			
											-	-	-	11	10	9	8	7	6	5	-	-	2	-			
MX123 CONN ASSY 56 CKT BLU OPT0 KEY G/32	2167420097	C-HSG-G0	G-CAP-0-P	TPA-G0	RS-2	LS-2	MAL-2	CPA-2	MSEAL	RSEAL	56	55	-	-	52	51	50	49	48	-	-	-	44	-	SALEABLE	Replacing PN 345767223	345750005
											42	-	-	-	-	37	36	35	-	-	32	-	-	-			
											-	-	-	-	-	23	22	-	-	-	-	17	-	15			
											14	-	-	-	-	9	8	7	-	5	4	-	-	1			
MX123 CONN ASSY 56 CKT BLU OPT0 KEY G/7	2167420098	C-HSG-G0	G-CAP-0-P	TPA-G0	RS-2	LS-2	MAL-2	CPA-2	MSEAL	RSEAL	56	55	54	53	52	51	50	49	48	47	-	-	44	43	SALEABLE	Replacing PN 345767233	345750005
											42	41	40	39	38	37	36	35	34	-	32	31	30	29			
											28	27	26	25	24	23	22	-	20	19	-	-	16	15			
											14	13	12	11	10	9	8	7	6	5	4	-	2	1			
MX123 CONN ASSY 56 CKT BLU OPT0 KEY G/29	2167420099	C-HSG-G0	G-CAP-0-P	TPA-G0	RS-2	LS-2	MAL-2	CPA-2	MSEAL	RSEAL	56	55	-	-	52	51	50	49	48	-	46	-	44	-	SALEABLE	Replacing PN 345767243	345750005
											42	-	-	-	-	37	36	35	-	-	32	-	-	-			
											-	-	-	-	-	23	22	21	-	-	-	17	-	15			
											14	-	-	-	-	9	8	7	6	5	4	-	-	1			
MX123 CONN ASSY 56 CKT BLU OPT0 KEY G/35	2167420100	C-HSG-G0	G-CAP-0-P	TPA-G0	RS-2	LS-2	MAL-2	CPA-2	MSEAL	RSEAL	-	55	-	-	-	51	50	49	48	-	-	-	44	-	SALEABLE	Replacing PN 345767253	345750005
											42	-	-	-	-	37	36	35	34	-	-	-	-	-			
											-	-	-	-	-	-	22	21	-	-	-	17	-	15			
											14	-	-	-	-	-	-	7	6	5	4	-	-	1			
MX123 CONN ASSY 56 CKT BLU OPT0 KEY G/24	2167420101	C-HSG-G0	G-CAP-0-P	TPA-G0	RS-2	LS-2	MAL-2	CPA-2	MSEAL	RSEAL	-	-	-	-	-	-	-	49	48	47	46	-	44	-	SALEABLE	Replacing PN 345767263	345750005
											-	-	-	-	38	37	36	-	-	-	32	31	30	29			
											-	-	26	25	24	23	22	21	20	19	-	17	-	15			
											-	-	12	11	10	9	8	7	6	5	4	-	-	1			
MX123 CONN ASSY 56 CKT BLU OPT0 KEY G/23	2167420102	C-HSG-G0	G-CAP-0-P	TPA-G0	RS-2	LS-2	MAL-2	CPA-2	MSEAL	RSEAL	-	-	-	-	-	-	-	49	48	47	46	-	44	43	SALEABLE	Replacing PN 345767273	345750005
											-	-	-	-	38	37	36	-	-	-	32	31	30	29			
											-	-	26	25	24	23	22	21	20	19	-	17	-	15			
											-	-	12	11	10	9	8	7	6	5	4	-	-	1			
MX123 CONN ASSY 56 CKT BLU OPT0 KEY G/32	2167420103	C-HSG-G0	G-CAP-0-P	TPA-G0	RS-2	LS-2	MAL-2	CPA-2	MSEAL	RSEAL	56	55	-	-	52	51	50	49	48	-	-	-	44	-	SALEABLE	Replacing PN 345767283	345750005
											42	-	-	39	-	37	36	35	-	-	-	-	-	-			
											-	-	-	-	-	23	22	21	-	-	-	17	-	15			
											14	-	-	-	-	9	-	7	-	5	4	-	-	1			
MX123 CONN ASSY 56 CKT BLU OPT9 KEY G/35	2167420104	C-HSG-G9	G-CAP-9-P	TPA-G9	RS-2	LS-2	MAL-2	CPA-2	MSEAL	RSEAL	56	55	-	-	52	51	50	-	-	-	-	-	44	-	SALEABLE	Replacing PN 345767293	345750005
											42	-	-	39	-	37	36	35	34	-	-	-	-	-			
											-	-	-	-	-	23	22	21	-	-	-	17	-	-			
											14	-	-	-	-	9	-	7	-	5	4	-	-	-			
MX123 CONN ASSY 56 CKT BLU OPT0 KEY G/18	2167420105	C-HSG-G0	G-CAP-0-P	TPA-G0	RS-2	LS-2	MAL-2	CPA-2	MSEAL	RSEAL	-	-	54	53	-	-	-	49	48	47	46	-	44	43	SALEABLE	Replacing PN 345767303	345750005
											-	-	40	39	38	37	36	-	-	-	32	31	30	29			
											-	-	26	25	24	23	22	21	20	19	-	17	-	15			
											-	-	12	11	10	9	8	7	6	5	4	-	2	1			
MX123 CONN ASSY 56 CKT BLU OPT0 KEY G/26	2167420106	C-HSG-G0	G-CAP-0-P	TPA-G0	RS-2	LS-2	MAL-2	CPA-2	MSEAL	RSEAL	-	-	-	-	-	-	-	49	48	47	46	-	44	43	SALEABLE	Replacing PN 345767313	345750005
											-	-	-	-	38	37	36	-	-	-	32	31	30	29			
											-	-	26	25	24	-	22	21	20	19	-	-	-	15			
											-	-	12	11	10	-	8	7	6	5	4	-	-	1			
MX123 CONN ASSY 56 CKT BLU OPT0 KEY G/25	2167420107	C-HSG-G0	G-CAP-0-P	TPA-G0	RS-2	LS-2	MAL-2	CPA-2	MSEAL	RSEAL	-	-	-	-	-	-	-	49	48	47	46	-	44	43	SALEABLE	Replacing PN 345767323	345750005
											-	-	-	-	38	37	36	-	-	-	32	31	30	29			
											-	-	26	25	24	-	22	21	20	19	-	17	-	15			
											-	-	12	11	10	-	8	7	6	5	4	-	-	1			

molex

MX123 SEALED RCPT ASSY (56 CKT)
BOM & PIN OUT SHEET

ASSEMBLY DESCRIPTION	ASSEMBLY PART NUMBER	CONNECTOR HOUSING	GROMMET CAP	TPA	RIGHT SLIDE	LEFT SLIDE	MATE ASSIST LEVER	CPA	MAT SEAL	RING SEAL	BLOCKED TERMINALS CAVITY WITH A NUMBER INDICATES BLOCKED TERMINAL POSITION CAVITY WITHOUT A NUMBER INDICATES OPEN TERMINAL POSITION														STATUS	COMMENTS	INTEGRAL COMPONENTS SOLD SEPARATELY DRESS COVER
MX123 CONN ASSY 56 CKT BLU OPT0 KEY G/24	2167420108	C-HSG-G0	G-CAP-0-P	TPA-G0	RS-2	LS-2	MAL-2	CPA-2	MSEAL	RSEAL	-	-	-	-	-	-	-	49	48	47	46	-	44	43	SALEABLE	Replacing PN 345767333	345750005
											-	-	-	-	38	37	36	-	-	-	32	31	30	29			
											-	-	26	25	24	23	22	21	20	19	-	-	-	15			
											-	-	12	11	10	9	8	7	6	5	4	-	-	1			
MX123 CONN ASSY 56 CKT BLU OPT0 KEY G/19	2167420109	C-HSG-G0	G-CAP-0-P	TPA-G0	RS-2	LS-2	MAL-2	CPA-2	MSEAL	RSEAL	-	-	54	53	-	-	-	49	48	47	-	-	44	43	SALEABLE	Replacing PN 345767343	345750005
											-	-	40	39	38	37	36	35	34	-	32	31	30	29			
											-	-	26	25	24	23	22	-	20	19	-	-	-	15			
											-	-	12	11	10	9	8	7	6	5	4	-	2	1			
MX123 CONN ASSY 56 CKT BLU OPT0 KEY G/32	2167420110	C-HSG-G0	G-CAP-0-P	TPA-G0	RS-2	LS-2	MAL-2	CPA-2	MSEAL	RSEAL	-	55	54	-	-	51	-	49	48	-	-	-	44	-	SALEABLE	Replacing PN 345767353	345750005
											42	41	-	39	-	37	36	35	-	-	-	-	-	-			
											-	-	-	-	-	23	22	21	-	-	-	17	-	15			
											14	-	-	-	-	9	-	7	6	5	4	-	-	1			
MX123 CONN ASSY 56 CKT GRY OPT0 KEY H/21	2167420111	C-HSG-H0	G-CAP-0-P	TPA-H0	RS-2	LS-2	MAL-2	CPA-2	MSEAL	RSEAL	56	55	54	53	52	-	-	49	-	-	-	-	44	43	SALEABLE	Replacing PN 345767363	345750005
											42	41	40	39	38	37	36	35	-	-	-	-	30	-			
											28	27	26	25	24	23	22	-	-	19	18	17	16	15			
											14	13	12	11	10	-	-	-	-	5	-	-	-	-			
MX123 CONN ASSY 56 CKT BLU OPT9 KEY G/14	2167420112	C-HSG-G9	G-CAP-9-P	TPA-G9	RS-2	LS-2	MAL-2	CPA-2	MSEAL	RSEAL	56	55	54	53	-	51	50	49	-	-	46	45	44	-	SALEABLE	Replacing PN 345767373	345750005
											42	41	-	39	38	-	-	35	-	33	32	31	-	29			
											28	27	26	25	-	23	22	21	-	19	18	17	16	-			
											-	13	12	11	10	9	8	-	6	5	4	3	2	1			
MX123 CONN ASSY 56 CKT BLU OPT9 KEY G/29	2167420113	C-HSG-G9	G-CAP-9-P	TPA-G9	RS-2	LS-2	MAL-2	CPA-2	MSEAL	RSEAL	-	-	-	-	52	51	50	-	-	-	46	-	-	43	SALEABLE	Replacing PN 345767383	345750005
											42	41	-	-	38	-	-	-	-	-	32	31	30	-			
											28	27	26	-	24	23	22	21	-	-	-	17	-	-			
											14	-	-	11	10	-	8	-	-	5	4	3	2	-			
MX123 CONN ASSY 56 CKT BLU OPT0 KEY G/18	2167420114	C-HSG-G0	G-CAP-0-P	TPA-G0	RS-2	LS-2	MAL-2	CPA-2	MSEAL	RSEAL	-	-	54	53	-	-	-	49	48	47	-	-	-	43	SALEABLE	Replacing PN 345767393	345750005
											-	-	40	39	38	37	36	35	34	33	32	31	30	29			
											28	27	26	25	24	23	22	-	20	-	-	17	16	-			
											-	-	12	11	10	9	-	7	6	5	4	-	2	1			
MX123 CONN ASSY 56 CKT BLU OPT0 KEY G/18	2167420115	C-HSG-G0	G-CAP-0-P	TPA-G0	RS-2	LS-2	MAL-2	CPA-2	MSEAL	RSEAL	-	-	54	53	-	-	-	49	48	47	46	-	44	43	SALEABLE	Replacing PN 345767403	345750005
											-	-	40	39	38	37	36	35	34	33	32	31	30	29			
											-	-	26	25	24	23	-	21	20	19	-	-	-	15			
											-	-	12	11	10	9	-	7	6	5	4	-	2	1			
MX123 CONN ASSY 56 CKT BLU OPT0 KEY G/36	2167420116	C-HSG-G0	G-CAP-0-P	TPA-G0	RS-2	LS-2	MAL-2	CPA-2	MSEAL	RSEAL	56	55	-	-	52	51	50	-	-	-	-	45	-	-	SALEABLE	Replacing PN 345767413	345750005
											42	41	-	-	-	-	-	35	34	33	-	-	-	-			
											28	27	-	-	-	-	22	-	-	-	18	-	16	-			
											14	13	-	-	-	-	8	-	-	-	-	3	-	-			
MX123 CONN ASSY 56 CKT BLU OPT0 KEY G/39	2167420117	C-HSG-G0	G-CAP-0-P	TPA-G0	RS-2	LS-2	MAL-2	CPA-2	MSEAL	RSEAL	56	55	-	-	52	51	50	-	-	-	-	45	-	-	SALEABLE	Replacing PN 345767423	345750005
											42	41	-	-	-	-	-	-	-	-	-	-	-	-			
											28	27	-	-	-	-	22	-	-	-	18	-	16	-			
											14	13	-	-	-	-	8	-	-	-	-	3	-	-			
MX123 CONN ASSY 56 CKT BLU OPT0 KEY G/38	2167420118	C-HSG-G0	G-CAP-0-P	TPA-G0	RS-2	LS-2	MAL-2	CPA-2	MSEAL	RSEAL	56	55	-	-	52	51	50	-	-	-	-	45	-	-	SALEABLE	Replacing PN 345767433	345750005
											42	41	-	-	-	-	-	-	-	-	-	-	-	-			
											28	27	-	-	-	-	22	-	-	-	18	17	16	-			
											14	13	-	-	-	-	8	-	-	-	-	3	-	-			
MX123 CONN ASSY 56 CKT BLU OPT0 KEY G/32	2167420119	C-HSG-G0	G-CAP-0-P	TPA-G0	RS-2	LS-2	MAL-2	CPA-2	MSEAL	RSEAL	56	55	-	-	52	51	50	-	-	-	46	45	44	-	SALEABLE	Replacing PN 345767443	345750005
											42	41	-	-	-	-	-	35	34	33	-	-	-	-			
											28	27	-	-	-	-	22	21	-	19	18	-	16	-			
											14	13	-	-	-	-	8	-	-	-	-	3	-	-			

molex

MX123 SEALED RCPT ASSY (56 CKT)
BOM & PIN OUT SHEET

ASSEMBLY DESCRIPTION	ASSEMBLY PART NUMBER	CONNECTOR HOUSING	GROMMET CAP	TPA	RIGHT SLIDE	LEFT SLIDE	MATE ASSIST LEVER	CPA	MAT SEAL	RING SEAL	BLOCKED TERMINALS CAVITY WITH A NUMBER INDICATES BLOCKED TERMINAL POSITION CAVITY WITHOUT A NUMBER INDICATES OPEN TERMINAL POSITION														STATUS	COMMENTS	INTEGRAL COMPONENTS SOLD SEPARATELY DRESS COVER
MX123 CONN ASSY 56 CKT BLU OPT9 KEY G/15	2167420120	C-HSG-G9	G-CAP-9-P	TPA-G9	RS-2	LS-2	MAL-2	CPA-2	MSEAL	RSEAL	56	55	54	53	-	51	50	49	-	-	46	-	44	-	SALEABLE	Replacing PN 345767453	345750005
											42	41	-	39	38	-	-	35	-	33	32	31	-	29			
											28	27	26	25	-	23	22	21	-	19	18	17	16	-			
											-	13	12	11	10	9	8	-	6	5	4	3	2	1			
MX123 CONN ASSY 56 CKT BLU OPT9 KEY G/16	2167420121	C-HSG-G9	G-CAP-9-P	TPA-G9	RS-2	LS-2	MAL-2	CPA-2	MSEAL	RSEAL	56	55	54	53	52	51	50	49	48	47	46	45	44	43	SALEABLE	Replacing PN 345767463	345750005
											42	41	40	39	38	37	36	35	34	-	32	-	30	29			
											28	27	26	25	-	-	-	-	-	-	-	17	-	15			
											14	13	12	11	-	-	-	-	-	5	4	3	-	1			
MX123 CONN ASSY 56 CKT BLU OPT9 KEY G/41	2167420122	C-HSG-G9	G-CAP-9-P	TPA-G9	RS-2	LS-2	MAL-2	CPA-2	MSEAL	RSEAL	-	-	-	-	52	-	-	-	48	47	-	45	-	43	SALEABLE	Replacing PN 345767473	345750005
											-	-	40	-	-	37	36	-	34	-	-	-	30	-			
											-	-	-	-	24	-	-	-	20	-	-	-	-	15			
											14	-	-	-	-	-	-	7	-	-	-	-	-	-			
MX123 CONN ASSY 56 CKT BLU OPT0 KEY G/19	2167420123	C-HSG-G0	G-CAP-0-P	TPA-G0	RS-2	LS-2	MAL-2	CPA-2	MSEAL	RSEAL	-	-	54	53	-	-	-	49	48	47	46	-	44	43	SALEABLE	Replacing PN 345767483	345750005
											-	-	40	39	38	37	36	-	-	-	32	31	30	29			
											-	-	26	25	24	23	22	21	20	19	-	17	-	15			
											-	-	12	11	10	9	8	7	6	5	-	-	2	1			
MX123 CONN ASSY 56 CKT BLU OPT0 KEY G/21	2167420124	C-HSG-G0	G-CAP-0-P	TPA-G0	RS-2	LS-2	MAL-2	CPA-2	MSEAL	RSEAL	-	-	-	-	-	-	-	49	48	47	46	-	44	43	SALEABLE	Replacing PN 345767493	345750005
											-	-	-	-	38	37	36	35	34	33	32	31	30	29			
											-	-	26	25	24	23	22	21	20	19	-	17	-	15			
											-	-	12	11	10	9	8	7	6	5	-	-	-	1			
MX123 CONN ASSY 56 CKT BLU OPT0 KEY G/16	2167420125	C-HSG-G0	G-CAP-0-P	TPA-G0	RS-2	LS-2	MAL-2	CPA-2	MSEAL	RSEAL	-	-	54	53	-	-	-	49	48	47	46	-	44	43	SALEABLE	Replacing PN 345767503	345750005
											-	-	40	39	38	37	36	35	34	33	32	31	30	29			
											-	-	26	25	24	23	22	21	20	19	-	17	-	15			
											-	-	12	11	10	9	8	7	6	5	-	-	2	1			
MX123 CONN ASSY 56 CKT BLU OPT0 KEY G/51	2167420126	C-HSG-G0	G-CAP-0-P	TPA-G0	RS-2	LS-2	MAL-2	CPA-2	MSEAL	RSEAL	-	-	-	-	-	-	-	-	-	-	-	-	-	-	SALEABLE	Replacing PN 345767513	345750005
											-	-	-	-	-	37	36	-	-	-	-	-	-	-			
											-	-	-	-	24	-	-	-	20	-	-	-	-	-			
											-	-	-	-	-	-	-	7	-	-	-	-	-	-			
MX123 CONN ASSY 56 CKT BLU OPT9 KEY G/5	2167420127	C-HSG-G9	G-CAP-9-P	TPA-G9	RS-2	LS-2	MAL-2	CPA-2	MSEAL	RSEAL	56	55	54	53	52	51	50	49	48	47	46	45	44	43	SALEABLE	Replacing PN 345767523	345750005
											42	41	40	39	38	-	-	35	34	33	32	31	30	29			
											28	27	26	25	-	23	22	21	-	19	18	17	16	15			
											14	13	12	11	10	9	8	-	6	5	4	3	2	1			
MX123 CONN ASSY 56 CKT BLU OPT9 KEY G/38	2167420128	C-HSG-G9	G-CAP-9-P	TPA-G9	RS-2	LS-2	MAL-2	CPA-2	MSEAL	RSEAL	-	55	-	-	-	51	50	-	-	-	-	-	44	-	SALEABLE	Replacing PN 345767533	345750005
											42	-	-	-	-	37	36	35	-	-	-	-	-	-			
											-	-	-	-	-	-	22	21	-	-	-	17	-	15			
											14	-	-	-	-	-	-	7	6	5	4	-	-	1			
MX123 CONN ASSY 56 CKT BLU OPT9 KEY G/37	2167420129	C-HSG-G9	G-CAP-9-P	TPA-G9	RS-2	LS-2	MAL-2	CPA-2	MSEAL	RSEAL	-	55	-	-	-	51	50	49	-	-	-	-	44	-	SALEABLE	Replacing PN 345767543	345750005
											42	-	-	-	-	37	36	35	-	-	-	-	-	-			
											-	-	-	-	-	-	22	21	-	-	-	17	-	15			
											14	-	-	-	-	-	-	7	6	5	4	-	-	1			
MX123 CONN ASSY 56 CKT BLU OPT0 KEY G/21	2167420130	C-HSG-G0	G-CAP-0-P	TPA-G0	RS-2	LS-2	MAL-2	CPA-2	MSEAL	RSEAL	56	55	54	53	-	-	-	49	48	47	46	-	44	-	SALEABLE	Replacing PN 345767573	345750005
											42	41	40	39	38	37	36	-	-	-	-	31	30	29			
											-	-	-	25	24	23	22	21	20	19	-	17	16	-			
											-	-	-	11	10	9	8	-	-	5	4	-	2	-			
MX123 CONN ASSY 56 CKT BLU OPT0 KEY G/18	2167420131	C-HSG-G0	G-CAP-0-P	TPA-G0	RS-2	LS-2	MAL-2	CPA-2	MSEAL	RSEAL	56	55	54	53	-	-	-	49	48	47	46	-	44	-	SALEABLE	Replacing PN 345767583	345750005
											42	41	40	39	38	37	36	35	34	33	-	31	30	29			
											-	-	-	25	24	23	22	21	20	19	-	17	16	-			
											-	-	-	11	10	9	8	-	-	5	4	-	2	-			

molex

MX123 SEALED RCPT ASSY (56 CKT)
BOM & PIN OUT SHEET

ASSEMBLY DESCRIPTION	ASSEMBLY PART NUMBER	CONNECTOR HOUSING	GROMMET CAP	TPA	RIGHT SLIDE	LEFT SLIDE	MATE ASSIST LEVER	CPA	MAT SEAL	RING SEAL	BLOCKED TERMINALS CAVITY WITH A NUMBER INDICATES BLOCKED TERMINAL POSITION CAVITY WITHOUT A NUMBER INDICATES OPEN TERMINAL POSITION														STATUS	COMMENTS	INTEGRAL COMPONENTS SOLD SEPARATELY DRESS COVER
MX123 CONN ASSY 56 CKT BLU OPT0 KEY G/22	2167420132	C-HSG-G0	G-CAP-0-P	TPA-G0	RS-2	LS-2	MAL-2	CPA-2	MSEAL	RSEAL	56	55	54	53	-	-	-	49	48	47	46	-	44	-	SALEABLE	Replacing PN 345767593	345750005
											42	41	40	39	38	37	36	-	-	-	-	31	30	29			
											-	-	-	25	24	23	22	21	20	19	-	17	16	-			
											-	-	-	11	10	9	8	-	-	5	-	-	2	-			
MX123 CONN ASSY 56 CKT BLU OPT0 KEY G/34	2167420133	C-HSG-G0	G-CAP-0-P	TPA-G0	RS-2	LS-2	MAL-2	CPA-2	MSEAL	RSEAL	-	-	54	53	-	-	-	49	48	47	46	-	-	-	SALEABLE	Replacing PN 345767603	345750005
											-	-	40	39	38	-	-	-	-	-	-	31	-	29			
											-	-	-	25	-	23	-	21	-	-	18	17	-	-			
											-	-	-	11	-	9	-	-	-	5	4	3	2	-			
MX123 CONN ASSY 56 CKT BLU OPT0 KEY G/13	2167420134	C-HSG-G0	G-CAP-0-P	TPA-G0	RS-2	LS-2	MAL-2	CPA-2	MSEAL	RSEAL	56	55	54	53	52	51	50	49	48	47	46	45	44	43	SALEABLE	Replacing PN 345767643	345750005
											-	-	40	39	38	37	36	35	34	33	32	31	-	-			
											-	27	-	25	24	-	22	21	-	19	18	-	16	-			
											-	13	12	11	10	-	8	7	6	5	4	3	2	-			
MX123 CONN ASSY 56 CKT BLU OPT0 KEY G/19	2167420135	C-HSG-G0	G-CAP-0-P	TPA-G0	RS-2	LS-2	MAL-2	CPA-2	MSEAL	RSEAL	56	55	54	53	-	-	-	49	48	47	-	-	44	-	SALEABLE	Replacing PN 345767693	345750005
											42	41	40	39	38	37	36	35	34	33	-	31	30	29			
											-	-	-	25	24	23	22	21	20	19	-	17	16	-			
											-	-	-	11	10	9	8	-	-	5	4	-	2	-			
MX123 CONN ASSY 56 CKT BLU OPT0 KEY G/22	2167420136	C-HSG-G0	G-CAP-0-P	TPA-G0	RS-2	LS-2	MAL-2	CPA-2	MSEAL	RSEAL	56	55	54	53	-	-	-	49	48	47	-	-	44	-	SALEABLE	Replacing PN 345767703	345750005
											42	41	40	39	38	37	36	-	-	-	-	31	30	29			
											-	-	-	25	24	23	22	21	20	19	-	17	16	-			
											-	-	-	11	10	9	8	-	-	5	4	-	2	-			
MX123 CONN ASSY 56 CKT BLU OPT0 KEY G/23	2167420137	C-HSG-G0	G-CAP-0-P	TPA-G0	RS-2	LS-2	MAL-2	CPA-2	MSEAL	RSEAL	56	55	54	53	-	-	-	49	48	47	-	-	44	-	SALEABLE	Replacing PN 345767713	345750005
											42	41	40	39	38	37	36	-	-	-	-	31	30	29			
											-	-	-	25	24	23	22	21	20	19	-	17	16	-			
											-	-	-	11	10	9	8	-	-	5	-	-	2	-			
MX123 CONN ASSY 56 CKT BLU OPT0 KEY G/14	2167420138	C-HSG-G0	G-CAP-0-P	TPA-G0	RS-2	LS-2	MAL-2	CPA-2	MSEAL	RSEAL	56	55	54	53	-	-	-	49	48	47	-	-	44	43	SALEABLE	Replacing PN 345767753	345750005
											42	41	40	39	38	37	36	35	34	-	32	31	30	29			
											-	-	26	25	24	23	22	-	20	19	-	-	16	15			
											-	-	12	11	10	9	8	7	6	5	4	-	2	1			
MX123 CONN ASSY 56 CKT BLU OPT0 KEY G/37	2167420139	C-HSG-G0	G-CAP-0-P	TPA-G0	RS-2	LS-2	MAL-2	CPA-2	MSEAL	RSEAL	56	55	-	-	52	51	50	-	-	-	46	45	-	-	SALEABLE	Replacing PN 345767803	345750005
											42	41	-	-	-	-	-	-	-	33	-	-	-	-			
											28	27	-	-	-	-	-	21	-	-	18	17	16	-			
											14	13	-	-	-	-	-	-	-	-	-	3	-	-			
MX123 CONN ASSY 56 CKT BLU OPT0 KEY G/16	2167420140	C-HSG-G0	G-CAP-0-P	TPA-G0	RS-2	LS-2	MAL-2	CPA-2	MSEAL	RSEAL	56	55	54	53	-	-	-	49	48	47	-	-	44	43	SALEABLE	Replacing PN 345767953	345750005
											42	41	40	39	38	37	36	35	34	-	32	31	30	29			
											-	-	-	25	24	23	22	-	20	19	-	-	16	15			
											-	-	-	11	10	9	8	7	6	5	4	-	2	1			
MX123 CONN ASSY 56 CKT GRY OPT0 KEY H/28	2167420141	C-HSG-H0	G-CAP-0-P	TPA-H0	RS-2	LS-2	MAL-2	CPA-2	MSEAL	RSEAL	56	55	-	-	-	-	50	49	48	47	-	-	-	-	SALEABLE	Replacing PN 345768013	345750005
											42	41	-	-	-	-	-	-	-	-	32	31	30	29			
											28	27	-	-	24	23	22	21	20	19	18	17	16	15			
											-	-	-	-	10	9	-	-	-	-	4	3	-	-			
MX123 CONN ASSY 56 CKT GRY OPT0 KEY H/40	2167420142	C-HSG-H0	G-CAP-0-P	TPA-H0	RS-2	LS-2	MAL-2	CPA-2	MSEAL	RSEAL	-	-	-	-	-	-	50	49	48	47	-	-	-	-	SALEABLE	Replacing PN 345768083	345750005
											-	-	-	-	-	-	-	-	-	-	32	31	30	29			
											-	-	-	-	-	-	-	-	-	-	18	17	16	15			
											-	-	-	-	10	9	-	-	-	-	4	3	-	-			
MX123 CONN ASSY 56 CKT GRY OPT0 KEY H/32	2167420143	C-HSG-H0	G-CAP-0-P	TPA-H0	RS-2	LS-2	MAL-2	CPA-2	MSEAL	RSEAL	56	55	-	-	-	-	50	49	48	47	-	-	-	-	SALEABLE	Replacing PN 345768093	345750005
											42	41	-	-	-	-	-	-	-	-	32	31	30	29			
											-	-	-	-	-	-	22	21	20	19	18	17	16	15			
											-	-	-	-	10	9	-	-	-	-	4	3	-	-			

molex

MX123 SEALED RCPT ASSY (56 CKT)
BOM & PIN OUT SHEET

ASSEMBLY DESCRIPTION	ASSEMBLY PART NUMBER	CONNECTOR HOUSING	GROMMET CAP	TPA	RIGHT SLIDE	LEFT SLIDE	MATE ASSIST LEVER	CPA	MAT SEAL	RING SEAL	BLOCKED TERMINALS CAVITY WITH A NUMBER INDICATES BLOCKED TERMINAL POSITION CAVITY WITHOUT A NUMBER INDICATES OPEN TERMINAL POSITION														STATUS	COMMENTS	INTEGRAL COMPONENTS SOLD SEPARATELY DRESS COVER
MX123 CONN ASSY 56 CKT GRY OPT0 KEY H/24	2167420144	C-HSG-H0	G-CAP-0-P	TPA-H0	RS-2	LS-2	MAL-2	CPA-2	MSEAL	RSEAL	56	55	-	-	-	-	50	49	48	47	46	45	44	43	SALEABLE	Replacing PN 345768103	345750005
											42	41	-	-	-	-	-	-	-	-	32	31	30	29			
											-	-	-	-	-	-	22	21	20	19	18	17	16	15			
											-	-	-	-	10	9	8	7	6	5	4	3	-	-			
MX123 CONN ASSY 56 CKT BLU OPT0 KEY G/33	2167420145	C-HSG-G0	G-CAP-0-P	TPA-G0	RS-2	LS-2	MAL-2	CPA-2	MSEAL	RSEAL	-	-	-	-	-	-	-	-	-	-	-	-	-	-	SALEABLE	Replacing PN 345768143	345750005
											42	41	-	39	38	37	-	-	34	33	32	-	30	29			
											28	-	26	-	-	23	-	-	20	-	-	17	16	15			
											14	-	-	11	-	-	-	-	-	5	4	-	2	1			
MX123 CONN ASSY 56 CKT BLU OPT0 KEY G/30	2167420146	C-HSG-G0	G-CAP-0-P	TPA-G0	RS-2	LS-2	MAL-2	CPA-2	MSEAL	RSEAL	-	-	-	-	52	-	-	49	48	-	-	45	-	-	SALEABLE	Replacing PN 345769183	345750005
											-	41	40	-	-	37	-	35	34	-	-	31	-	-			
											-	-	-	-	24	23	22	21	20	19	18	17	16	15			
											-	-	-	-	-	-	-	-	6	5	4	3	2	1			
MX123 CONN ASSY 56 CKT BLU OPT0 KEY G/25	2167420147	C-HSG-G0	G-CAP-0-P	TPA-G0	RS-2	LS-2	MAL-2	CPA-2	MSEAL	RSEAL	56	55	54	53	52	51	50	49	48	47	46	45	44	43	SALEABLE	Replacing PN 345769333	345750005
											-	-	40	-	-	-	-	-	-	-	-	31	-	-			
											-	27	-	25	24	-	22	21	-	19	18	-	-	-			
											-	13	12	-	10	9	8	7	6	-	-	3	-	-			
MX123 CONN ASSY 56 CKT BLU OPT0 KEY G/22	2167420148	C-HSG-G0	G-CAP-0-P	TPA-G0	RS-2	LS-2	MAL-2	CPA-2	MSEAL	RSEAL	56	55	54	53	52	51	50	49	48	47	46	45	44	43	SALEABLE	Replacing PN 345769343	345750005
											42	41	40	39	38	37	36	35	34	33	32	31	30	-			
											-	-	26	25	24	-	-	-	-	-	-	17	16	-			
											-	-	-	-	-	-	-	-	-	-	-	3	2	-			
MX123 CONN ASSY 56 CKT BLU OPT0 KEY G/37	2167420149	C-HSG-G0	G-CAP-0-P	TPA-G0	RS-2	LS-2	MAL-2	CPA-2	MSEAL	RSEAL	-	55	-	-	52	51	50	-	48	47	46	45	44	-	SALEABLE	Replacing PN 345769353	345750005
											-	41	-	-	38	-	36	-	-	-	32	-	30	-			
											-	-	26	25	24	-	-	-	-	-	-	-	-	-			
											-	-	-	-	-	-	-	-	-	-	-	3	2	-			
MX123 CONN ASSY 56 CKT BLU OPT0 KEY G/29	2167420150	C-HSG-G0	G-CAP-0-P	TPA-G0	RS-2	LS-2	MAL-2	CPA-2	MSEAL	RSEAL	56	55	54	53	52	51	50	-	48	47	46	45	44	-	SALEABLE	Replacing PN 345769413	345750005
											42	41	40	39	38	37	36	35	-	-	32	-	30	-			
											-	-	26	25	24	-	-	-	-	-	-	-	-	-			
											-	-	-	-	-	-	-	-	-	-	-	3	2	-			
MX123 CONN ASSY 56 CKT BLU OPT0 KEY G/27	2167420151	C-HSG-G0	G-CAP-0-P	TPA-G0	RS-2	LS-2	MAL-2	CPA-2	MSEAL	RSEAL	-	55	-	-	-	-	-	49	48	47	46	45	-	43	SALEABLE	Replacing PN 345769423	345750005
											-	-	40	39	38	37	36	-	-	33	-	-	30	-			
											28	27	26	25	24	23	22	21	-	-	-	-	-	-			
											14	13	-	11	10	9	-	-	6	-	-	3	-	-			
MX123 CONN ASSY 56 CKT BLU OPT0 KEY G/30	2167420152	C-HSG-G0	G-CAP-0-P	TPA-G0	RS-2	LS-2	MAL-2	CPA-2	MSEAL	RSEAL	56	55	-	-	-	51	50	49	48	47	46	45	-	43	SALEABLE	Replacing PN 345769433	345750005
											42	41	40	39	38	-	-	-	-	33	-	-	30	-			
											28	27	-	-	-	-	22	-	-	-	-	-	-	-			
											14	13	-	11	10	9	-	-	6	-	-	-	-	-			
MX123 CONN ASSY 56 CKT BLU OPT0 KEY G/30	2167420153	C-HSG-G0	G-CAP-0-P	TPA-G0	RS-2	LS-2	MAL-2	CPA-2	MSEAL	RSEAL	56	-	-	-	-	-	-	-	-	-	46	45	44	43	SALEABLE	Replacing PN 345769733	345750005
											42	41	-	-	-	-	-	-	-	33	32	31	30	29			
											28	27	-	-	-	-	-	-	-	19	18	17	16	15			
											14	13	-	-	-	-	-	-	-	5	4	3	2	1			
MX123 CONN ASSY 56 CKT BLU OPT0 KEY G/36	2167420154	C-HSG-G0	G-CAP-0-P	TPA-G0	RS-2	LS-2	MAL-2	CPA-2	MSEAL	RSEAL	56	-	-	-	-	-	-	-	-	-	46	-	-	43	SALEABLE		345750005
											42	41	-	-	-	-	-	-	-	-	-	-	-	29			
											28	27	-	-	-	-	-	-	-	19	18	17	16	15			
											14	13	-	-	-	-	-	-	-	5	4	3	2	1			
MX123 CONN ASSY 56 CKT BLU OPT0 KEY G/28	2167420155	C-HSG-G0	G-CAP-0-P	TPA-G0	RS-2	LS-2	MAL-2	CPA-2	MSEAL	RSEAL	-	-	-	-	52	51	50	49	48	-	-	45	-	-	SALEABLE		345750005
											-	41	40	-	-	37	36	-	34	-	-	31	-	-			
											-	-	-	-	24	23	22	21	20	19	18	17	16	15			
											-	-	-	-	-	-	-	-	6	5	4	3	2	1			

molex

MX123 SEALED RCPT ASSY (56 CKT)
BOM & PIN OUT SHEET

ASSEMBLY DESCRIPTION	ASSEMBLY PART NUMBER	CONNECTOR HOUSING	GROMMET CAP	TPA	RIGHT SLIDE	LEFT SLIDE	MATE ASSIST LEVER	CPA	MAT SEAL	RING SEAL	BLOCKED TERMINALS CAVITY WITH A NUMBER INDICATES BLOCKED TERMINAL POSITION CAVITY WITHOUT A NUMBER INDICATES OPEN TERMINAL POSITION														STATUS	COMMENTS	INTEGRAL COMPONENTS SOLD SEPARATELY DRESS COVER
MX123 CONN ASSY 56 CKT BLU OPT0 KEY G/26	2167420156	C-HSG-G0	G-CAP-0-P	TPA-G0	RS-2	LS-2	MAL-2	CPA-2	MSEAL	RSEAL	-	55	54	53	52	51	50	49	48	47	-	-	-	-	SALEABLE	Replacing PN 345769753	345750005
											-	-	40	39	38	37	36	35	34	-	-	-	-	-			
											-	-	26	25	24	23	22	21	20	-	-	-	-	-			
											-	-	12	11	10	9	8	7	6	-	-	-	-	-			
MX123 CONN ASSY 56 CKT BLU OPT9 KEY G/34	2167420157	C-HSG-G9	G-CAP-9-P	TPA-G9	RS-2	LS-2	MAL-2	CPA-2	MSEAL	RSEAL	-	-	-	-	-	-	-	49	48	-	-	45	-	-	SALEABLE		345750005
											-	41	-	-	-	-	-	-	34	-	-	31	-	-			
											-	-	-	-	24	23	22	21	20	19	18	17	16	15			
											-	-	-	-	-	-	-	-	6	5	4	3	2	1			
MX123 CONN ASSY 56 CKT BLU OPT0 KEY G/46	2167420158	C-HSG-G0	G-CAP-0-P	TPA-G0	RS-2	LS-2	MAL-2	CPA-2	MSEAL	RSEAL	-	-	-	-	-	-	50	49	48	47	-	-	-	-	SALEABLE		345750005
											-	-	-	-	-	-	36	35	-	-	-	-	-	-			
											-	-	-	-	-	-	-	-	-	-	-	-	-	-			
											-	-	-	-	-	-	8	7	6	5	-	-	-	-			
MX123 CONN ASSY 56 CKT BLU OPT9 KEY G/31	2167420159	C-HSG-G9	G-CAP-9-P	TPA-G9	RS-2	LS-2	MAL-2	CPA-2	MSEAL	RSEAL	-	55	-	-	52	51	50	49	48	47	46	45	44	-	SALEABLE	Replacing PN 345769583	345750005
											-	41	-	-	38	-	36	-	-	-	32	31	30	-			
											-	-	26	25	24	-	-	-	-	19	18	17	16	-			
											-	-	-	-	-	-	-	-	-	-	-	3	2	-			
MX123 CONN ASSY 56 CKT BLU OPT0 KEY G/29	2167420160	C-HSG-G0	G-CAP-0-P	TPA-G0	RS-2	LS-2	MAL-2	CPA-2	MSEAL	RSEAL	56	55	54	-	52	51	50	49	48	47	-	-	-	-	SALEABLE	Replacing PN 345769593	345750005
											42	41	40	39	38	37	36	35	-	-	32	31	30	-			
											-	-	26	25	24	-	-	-	-	19	18	-	-	-			
											-	-	-	-	-	-	-	-	-	-	-	3	2	-			
MX123 CONN ASSY 56 CKT BLU OPT0 KEY G/18	2167420161	C-HSG-G0	G-CAP-0-P	TPA-G0	RS-2	LS-2	MAL-2	CPA-2	MSEAL	RSEAL	56	55	54	53	52	51	50	49	48	47	46	45	44	43	SALEABLE	Replacing PN 345769613	345750005
											-	-	40	39	38	-	36	35	-	33	32	31	-	-			
											-	-	-	25	24	-	22	21	-	19	18	-	16	-			
											-	13	12	-	10	9	8	7	6	-	4	3	-	-			
MX123 CONN ASSY 56 CKT BLU OPT0 KEY G/42	2167420162	C-HSG-G0	G-CAP-0-P	TPA-G0	RS-2	LS-2	MAL-2	CPA-2	MSEAL	RSEAL	-	-	-	-	-	51	50	-	-	-	46	-	-	-	SALEABLE	Replacing PN 345769553	345750005
											-	41	-	-	38	-	36	-	34	33	-	-	-	-			
											-	-	-	25	-	-	-	-	-	-	18	-	-	-			
											-	-	12	11	10	9	-	-	-	-	-	-	-	-			
MX123 CONN ASSY 56 CKT BLU OPT0 KEY G/32	2167420163	C-HSG-G0	G-CAP-0-P	TPA-G0	RS-2	LS-2	MAL-2	CPA-2	MSEAL	RSEAL	-	55	-	53	52	51	50	49	48	47	-	-	44	-	SALEABLE	Replacing PN 345769563	345750005
											-	41	-	-	38	-	36	-	-	-	32	31	30	-			
											-	-	26	25	24	-	-	-	-	19	18	-	-	-			
											-	-	-	-	-	-	-	-	-	5	4	3	2	-			
MX123 CONN ASSY 56 CKT BLU OPT9 KEY G/18	2167420164	C-HSG-G9	G-CAP-9-P	TPA-G9	RS-2	LS-2	MAL-2	CPA-2	MSEAL	RSEAL	56	55	54	53	52	51	50	49	48	47	46	45	44	43	SALEABLE	Replacing PN 345769443	345750005
											-	-	40	39	38	-	36	35	-	33	32	31	-	-			
											-	-	-	25	24	-	22	21	-	19	18	-	16	-			
											-	13	12	-	10	9	8	7	6	-	4	3	-	-			
MX123 CONN ASSY 56 CKT BLU OPT0 KEY G/17	2167420165	C-HSG-G0	G-CAP-0-P	TPA-G0	RS-2	LS-2	MAL-2	CPA-2	MSEAL	RSEAL	56	55	54	53	-	-	-	49	48	47	-	-	44	-	SALEABLE	Replacing PN 345769483	345750005
											42	41	40	39	38	37	36	35	34	-	32	31	30	29			
											-	-	-	25	24	23	22	-	20	19	-	-	16	15			
											-	-	-	11	10	9	8	7	6	5	4	-	2	1			
MX123 CONN ASSY 56 CKT BLU OPT9 KEY G/29	2167420166	C-HSG-G9	G-CAP-9-P	TPA-G9	RS-2	LS-2	MAL-2	CPA-2	MSEAL	RSEAL	-	55	-	-	52	51	50	49	48	47	46	45	44	-	SALEABLE	Replacing PN 345769473	345750005
											-	41	-	-	38	-	36	-	-	-	32	31	30	-			
											-	-	26	25	24	-	-	-	-	19	18	17	16	-			
											-	-	-	-	-	-	-	-	-	5	4	3	2	-			
MX123 CONN ASSY 56 CKT BLU OPT0 KEY G/28	2167420167	C-HSG-G0	G-CAP-0-P	TPA-G0	RS-2	LS-2	MAL-2	CPA-2	MSEAL	RSEAL	56	55	54	53	52	51	50	49	48	47	46	45	44	43	SALEABLE		345750005
											-	-	40	-	-	-	-	-	-	-	-	31	-	-			
											-	-	-	25	24	-	22	21	-	-	-	-	-	-			
											-	13	12	-	10	9	8	7	6	-	-	3	-	-			

molex

MX123 SEALED RCPT ASSY (56 CKT)
BOM & PIN OUT SHEET

ASSEMBLY DESCRIPTION	ASSEMBLY PART NUMBER	CONNECTOR HOUSING	GROMMET CAP	TPA	RIGHT SLIDE	LEFT SLIDE	MATE ASSIST LEVER	CPA	MAT SEAL	RING SEAL	BLOCKED TERMINALS CAVITY WITH A NUMBER INDICATES BLOCKED TERMINAL POSITION CAVITY WITHOUT A NUMBER INDICATES OPEN TERMINAL POSITION														STATUS	COMMENTS	INTEGRAL COMPONENTS SOLD SEPARATELY DRESS COVER
MX123 CONN ASSY 56 CKT BLU OPT9 KEY G/27	2167420168	C-HSG-G9	G-CAP-9-P	TPA-G9	RS-2	LS-2	MAL-2	CPA-2	MSEAL	RSEAL	-	-	-	-	52	51	50	49	48	-	-	45	-	-	SALEABLE	Replacing PN 345769503	345750005
											-	41	40	-	-	37	36	35	34	-	-	31	-	-			
											-	-	-	-	24	23	22	21	20	19	18	17	16	15			
											-	-	-	-	-	-	-	-	6	5	4	3	2	1			
MX123 CONN ASSY 56 CKT BLU OPT9 KEY G/33	2167420169	C-HSG-G9	G-CAP-9-P	TPA-G9	RS-2	LS-2	MAL-2	CPA-2	MSEAL	RSEAL	-	55	-	-	52	51	50	49	-	-	46	45	44	-	SALEABLE		345750005
											-	41	-	-	38	-	36	-	-	-	32	31	30	-			
											-	-	26	25	24	-	-	-	-	19	18	17	16	-			
											-	-	-	-	-	-	-	-	-	-	-	3	2	-			
MX123 CONN ASSY 56 CKT BLU OPT0 KEY G/26	2167420170	C-HSG-G0	G-CAP-0-P	TPA-G0	RS-2	LS-2	MAL-2	CPA-2	MSEAL	RSEAL	56	55	54	53	52	51	50	49	48	47	46	45	44	43	SALEABLE		345750005
											-	-	40	-	-	-	36	35	-	-	-	31	-	-			
											-	-	-	25	24	-	22	21	-	-	-	-	-	-			
											-	13	12	-	10	9	8	7	6	-	-	3	-	-			
MX123 CONN ASSY 56 CKT BLU OPT9 KEY G/30	2167420171	C-HSG-G9	G-CAP-9-P	TPA-G9	RS-2	LS-2	MAL-2	CPA-2	MSEAL	RSEAL	-	-	-	-	-	51	50	49	48	-	-	45	-	-	SALEABLE		345750005
											-	41	-	-	-	-	36	35	34	-	-	31	-	-			
											-	-	-	-	24	23	22	21	20	19	18	17	16	15			
											-	-	-	-	-	-	-	-	6	5	4	3	2	1			
MX123 CONN ASSY 56 CKT BLU OPT0 KEY G/26	2167420172	C-HSG-G0	G-CAP-0-P	TPA-G0	RS-2	LS-2	MAL-2	CPA-2	MSEAL	RSEAL	-	-	54	53	52	51	50	49	48	-	-	45	-	-	SALEABLE		345750005
											-	41	40	-	-	37	36	-	34	-	-	31	-	-			
											-	-	-	-	24	23	22	21	20	19	18	17	16	15			
											-	-	-	-	-	-	-	-	6	5	4	3	2	1			